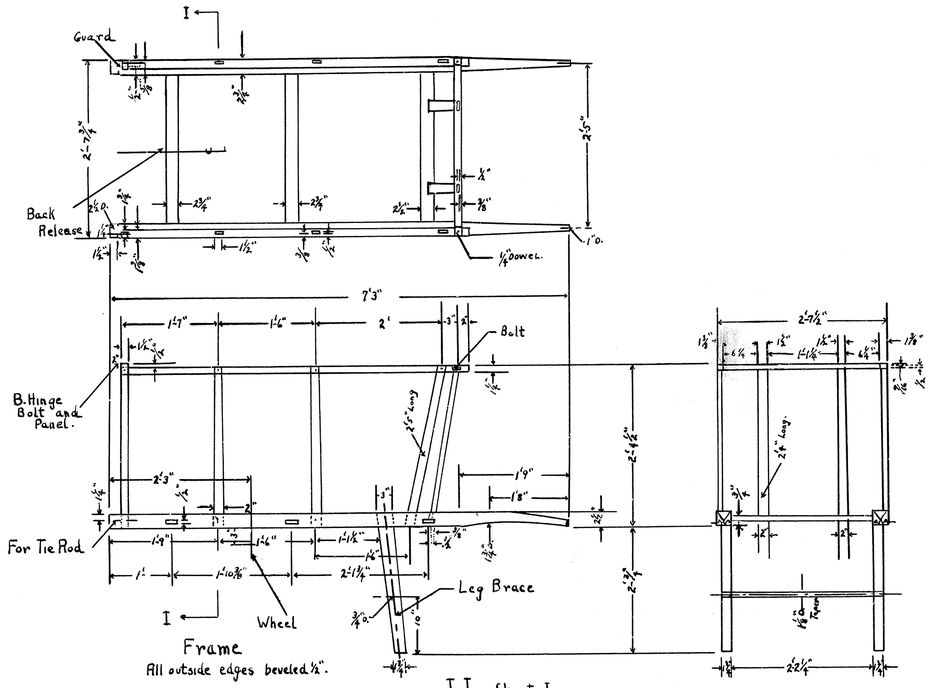

Frame
All outside edges beveled 1/2".

II Sheet Iron covering to back.

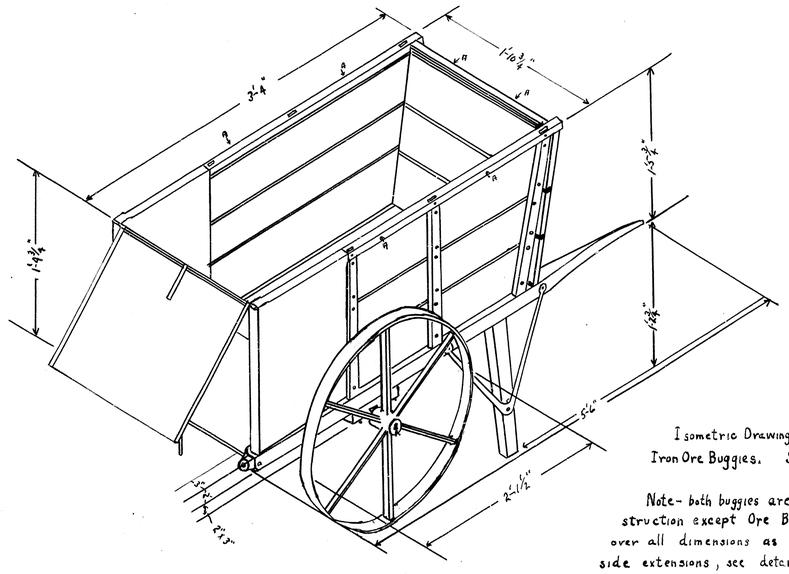

Isometric Drawing of Charcoal and Iron Ore Buggies. Scale 1" = 1'0" (see note)

Note- both buggies are of same construction except Ore Buggy has smaller over all dimensions as shown, and side extensions, see detail drawing of.

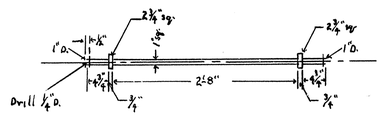

Axle

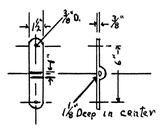

Axle Clamp.
2 req. - 6" Bolt 3/4" D. - 16 Thd. per 1" for 1" - 7/8" Sq. Hd. 1/4" T. - Nut 1/4" T. x 7/8" sq.
2 req. per Clamp.

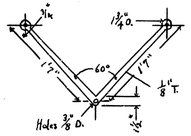

Leg Brace No Scale
2 req.

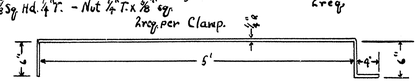

Back Release
For Front

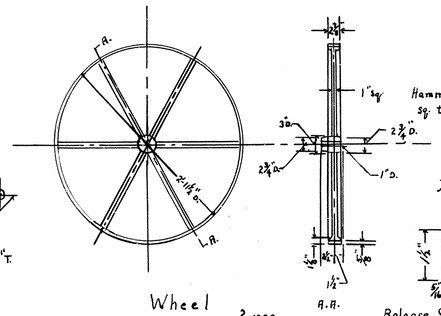

Wheel
2 req.

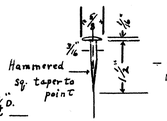

- 1/2" Tacks for Sheet metal 3/16" D. Hd. 50 req.

Tack 90 req. for nailing sides and Leg Braces

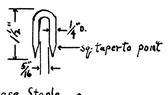

Release Staple 2 req.

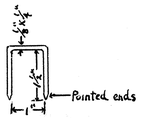

Extension Staple 6 req.
Centered in top beam for legs of Ore Buggy Side Ext.

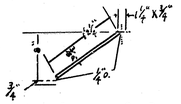

Leg Brace for Ore Buggy
2 req.

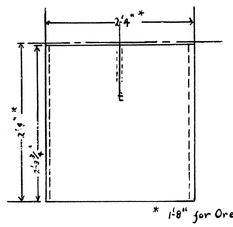

Ore Buggy Side Extensions
Req. 1 per side - 1 for Back