Date: 10/6/2020

BUILDING AUTOMATION SYSTEM

AS-BUILT DRAWINGS

Cliff House
1090 Point Lobos Ave
San Francisco, CA 94121
USA

Submitted To:
Jesse Eisenhart
WSP USA
405 Howard Street, Ste 500
San Francisco, CA 94105

Submitted By:

Philip Gonzales

JCI Contract: 9N0K-0074

1615 Alvarado St.
San Leandro, CA 94577
Tel: 510 780 7676
Fax: 510-780-7711

STAMPS

Cliff House

9N0K-0074

DRAWING INDEX		
Rev	**Drawing No.**	**Description**
	NR-1-1	MSTP INSTALLATION REFERENCE
	NR-1-2	NETWORK RISER
2	HP-1-1	HP-1&4 FLOW DIAGRAM
	HP-1-2	HP-1&4 POINT SCHEDULE
	HP-1-3	HP-1&4 WIRING DETAILS
	HP-1-4	HP-1&4 CONTROLLER WIRING DETAILS
2	HP-1-5	HP-2 & 3 FLOW DIAGRAM
	HP-1-6	HP-2&3 POINT SCHEDULE & WIRING DETAILS
	HP-1-7	HP-2&3 CONTROLLER WIRING DETAILS
2	HP-1-8	HP-5 FLOW DIAGRAM
1	HP-1-9	HP-5 POINT SCHEDULE
	HP-1-10	HP-5 WIRING DETAILS
1	HP-1-11	HP-5 CONTROLLER WIRING DETAILS
2	HP-1-12	HP-6 FLOW DIAGRAM
	HP-1-13	HP-6 POINT SCHEDULE & WIRING DETAILS
	HP-1-14	HP-6 CONTROLLER WIRING DETAILS
1	MSF-1-1	MSF FLOW DIAGRAM
	PS-1-1	POWER SCHEDULE
	PD-1	PRODUCT CATALOG

LEGEND

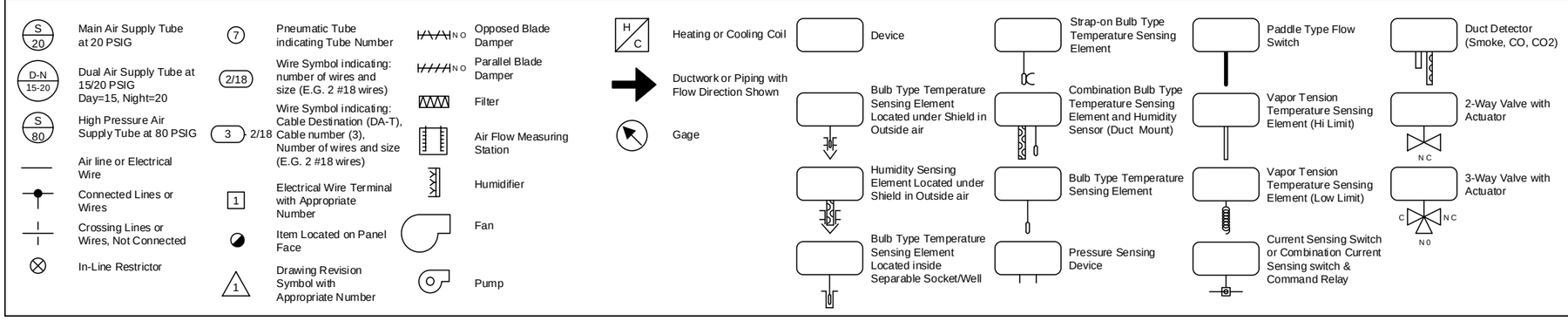

Johnson Controls

Creating a better climate for business.

- ■ **Environmental Control System**
- ■ **Facility Management System**
- ☐ **Air and Water System Balancing**
- ☐ **Fire Management System**
- ☐ **Security System**
- ☐ **Lighting Services**
- ☐ **Instrumentation System Installation**
- ☐ **Building Operations Management**
- ☐ **Energy Conservation Control**
- ☐ **Training Programs**
- ☐ **Performance Contracting**
- ☐ **Planned Service Agreements**

Air Conditioning
Heating
Diagnostic Services
Coil Cleaning
Refrigeration
Automatic Temperature Controls
Facility Management Systems
Fire Management
Security Management
Building Operations and Management
Water Treatment
Electrical Equipment
Emergency Generator / Lighting Equipment
Industrial Controls / Recording / Indication Equipment

PROJECT TITLE

Cliff House
1090 Point Lobos Ave
San Francisco, CA 94121

ARCHITECT

ENGINEER

WSP USA
405 Howard Street, Ste 500
San Francisco, CA 94105
Phone: 415-398-3833

MECHANICAL CONTRACTOR

Therma
1601 Las Plumas Ave
San Jose, CA 95133
Phone: 408-347-3400

ELECTRICAL CONTRACTOR

REFERENCE DRAWING	NO.	REVISION-LOCATION	ECN	DATE	BY
	3	REV.3 (AS-BUILT Drawing)		07/28/2020	JCI
	2	REV.2		05/03/2019	JCI
	1	REV.1		04/15/2019	JCI

Johnson Controls

Branch Information

Johnson Controls, Inc.
1615 Alvarado St.
San Leandro, CA 94577
Phone: 510-780-7700
Fax: 510-780-7711

SALES ENGINEER	PROJECT MANAGER	APPLICATION ENGINEER	DATE	CONTRACT NUMBER
Dan S Levi	David D Thorne	CoEE	**03/25/2019**	**9N0K-0074**

METASYS MSTP NETWORK INSTALLATION DETAILS

The information in this document is not intended to replace the published Technical Product Literature for the Johnson Controls systems and products presented. The Installation Instructions that are packed with products, and the Technical Bulletins and Product Bulletins released with Johnson Controls systems and products supersede the information on this page. It is the responsibility of the product installer and product user to obtain and follow the product installation, operation, and safety procedures provided with the products or project specific information required by specification or local codes.

Category	Rules / Maximums Allowed
General	Typically daisy-chained; branch or star configuration acceptable when repeaters are used. See End of Line Switching and Repeater Guideline graphic.
Number of Devices	**When all of the devices connected on the FC Bus are Metasys FECs, VMAs, and/or IOMs, the device and bus segment limits are:** 100 devices total per FC Bus (maximum) 3 bus segments per FC Bus (maximum) 50 devices per bus segment (maximum, not to exceed 100 devices per FC Bus) **When one or more TEC26xx Series thermostat or third-party MS/TP device is connected on the FC Bus, the device and bus segment limits are:** 64 devices total per FC Bus (maximum) 3 bus segments per FC Bus (maximum) 32 devices per bus segment (maximum, not to exceed 64 devices per FC Bus) **Note:** Metasys MS/TP devices generate less data traffic than third-party MS/TP devices and TEC26xx thermostats. Connecting third-party devices or TEC26xx thermostats to the FC Bus increases data traffic, reduces bus performance, and reduces the number of devices that can be connected to the bus. Bus segments on an FC Bus are connected with repeaters (only). Up to two cascaded repeaters may be applied to an FC Bus (to connect three bus segments).
Line Length and Type	**When all of the devices connected on the FC Bus are Metasys FECs, VMAs, and/or IOMs, the cable length limits are:** Each bus segment can be up to 1520 m (5000 ft) in length (using 22 AWG 3-wire twisted, shielded cable). Each FC Bus can be up to 4750 m (15,000 ft) in length (using 22 AWG 3-wire twisted, shielded cable). **When one or more TEC26xx Series thermostat or third-party MS/TP device is connected on the FC Bus, the device and bus segment limits are:** Each bus segment can be up to 1220 m (4000 ft) in length (using 22 AWG 3-wire twisted, shielded cable) Each FC Bus can be up to 3660 m (12,000 ft) in length (using 22 AWG 3-wire twisted, shielded cable). When using fiber-optic connections: 2,010 m (6,600 ft.) between two fiber modems 22 AWG Stranded, 3-Wire Twisted, Shielded Cable
Cable	22 AWG stranded, 3-wire, twisted shielded cable
EOL Termination	End-of-Line (EOL) termination is required on the FC Bus to reduce signal reflection when data transmissions reach the end of a bus segment and bounce back. EOL termination is built into some Metasys FC devices and is enabled with a switch or jumper on the device. **EOL Termination on NCEs** An EOL switch on an NAE enables EOL termination. For those NAEs with two FC Bus connections, two EOL double-pole switches are provided. Set the EOL switch to the ON (up) position to set the controller as an EOL termination device. **EOL Termination on Switch-Terminating Devices** Some field controllers have an EOL switch or jumper. Such devices include FECs, IOMs, VMAs, ZFR1810s, and repeaters. Set the EOL termination to On for any of these devices when it is the last device on a bus segment. **EOL Termination on Devices Without EOL Provision** For the devices such as TECs and third-party controllers in which no EOL provision is provided, install the MS-BACEOL-0 RS485 End-of-Line Terminator at the device if at the end of the bus segment. **EOL Termination Across the FC Bus** The FC Bus may consist of up to three bus segments. Each bus segment on an FC Bus requires two EOL termination devices, one at each end of the bus segment. All other devices on the FC Bus should have their EOL termination disabled (EOL switches Off) . If only one device on an FC segment has an EOL termination, it must be set to On. **EOL on FC Bus Repeaters** When using repeaters in the FC Bus, set the EOL jumpers based on the position of the repeater in the run.

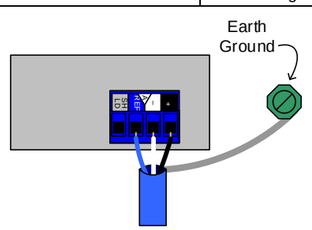

SHIELD GROUNDING

The shield should be earth grounded at one and only one point for the entire bus segment. (Preferably in the NCE Panel.) The shield screws on the controllers are simply a convenient way to continue the daisy chain of the bus. They are not attached to earth ground. You can use the shield terminal or twist together the shield and tape back at each controller.

RECOMMENDED MSTP FIELD CONTROLLER BUS CABLE

Type	Typical Usage	Anixter #	Belden #	pF/ft	Area
22/3c Shielded Plenum	Open Plenum Installations. 38400+ Baud RS-485 Communication.	CBL-22/3-FC-PLN	6501FE	25	0.014
22/3c Shielded PVC	EMT (Raceway) Installations. 38400+ Baud RS-485 Communication.	CBL-22/3-FC-PVC	5501FE	31	0.015

RECOMMENDED MSTP SENSOR ACTUATOR BUS CABLE

Type	Typical Usage	Anixter #	Belden #	pF/ft	Area
22/2pr Shielded Plenum	Open Plenum Installations. 38400+ Baud RS-485 Communication.	CBL-22/2P-SA-PLN	6541FE	33	0.033
22/2pr Shielded PVC	EMT (Raceway) Installations. 38400+ Baud RS-485 Communication.	CBL-22/2P-SA-PVC	5541FE	31	0.034

END OF THE LINE SWITCHING AND REPEATER GUIDELINES

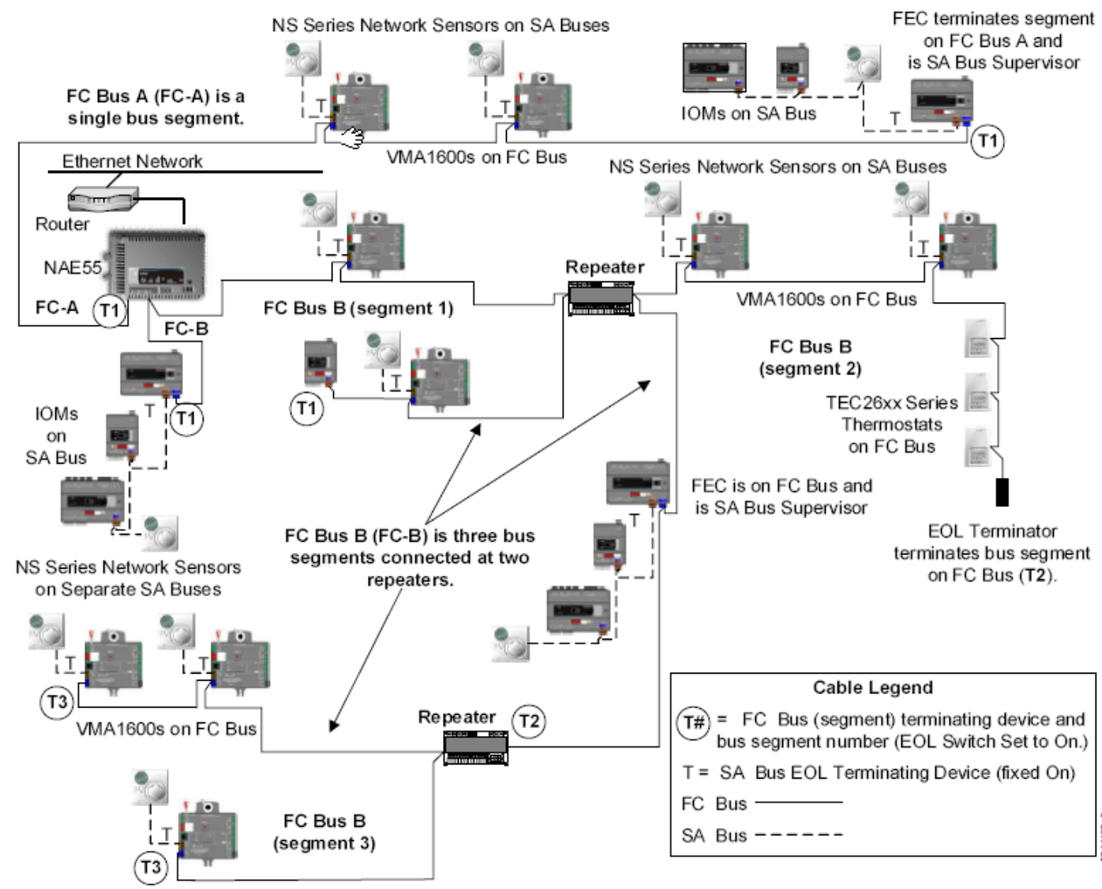

IN CONSIDERATION OF THE RECEIPT OF THIS DOCUMENT, THE RECIPIENT AGREES NOT TO REPRODUCE, COPY, USE OR TRANSMIT THIS DOCUMENT AND/OR THE INFORMATION THEREIN CONTAINED, IN WHOLE OR IN PART, OR TO SUFFER SUCH ACTION BY OTHERS, FOR ANY PURPOSE, EXCEPT WITH THE ADVANCE WRITTEN PERMISSION OF JOHNSON CONTROLS, INC. AND FURTHER AGREES TO SURRENDER SAME TO JOHNSON CONTROLS, INC. UPON DEMAND.

COPYRIGHT JOHNSON CONTROLS, INC. 2016

Drawing Title
MSTP INSTALLATION REFERENCE

REFERENCE DRAWING	NO.	REVISION-LOCATION	ECN	DATE	BY

Sales Engineer	Project Manager	Application Engineer	DRAWN BY	DRAWN DATE	APPROVED BY	APPROVED DATE
Dan S Levi	David D Thorne	COEE				

Project Title
Cliff House
1090 Point Lobos Ave
San Francisco, CA 94121

Johnson Controls

Branch Information
Johnson Controls, Inc.
1615 Alvarado St.
San Leandro, CA 94577
Phone: 510-780-7700
Fax: 510-780-7711

CONTRACT NUMBER
9N0K-0074

DRAWING NUMBER
NR-1-1

NETWORK RISER

NOTE:

1. CP HP-1~ CP HP-5 Controller are located on the side of each Heat Pump in a 12 X 12 Enclosure
2. CP HP-6 Controller will be located in Data closet of Gift Shop in a 12 X 12 Enclosure
3. Place JCI MS/TP Device at EOL if this is last device

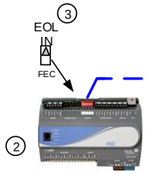

NAME: HP-6
DEVICE: MS-FEC2611
MS/TP ADD: 09
LOCATION: SECOND FLOOR GIFT SHOP

SECOND FLOOR

FC BUS

1 **NAME:** HP-5
DEVICE: NCE2560
MSTP ADD: 04
IP ADD: 192.168.183.2
LOCATION: GROUND FLOOR MECHANICAL ROOM

1 **NAME:** HP-2
DEVICE: MS-FEC2611
MS/TP ADD: 06
LOCATION: GROUND FLOOR MECHANICAL ROOM

1 **NAME:** HP-3
DEVICE: MS-FEC2611
MS/TP ADD: 07
LOCATION: GROUND FLOOR MECHANICAL ROOM

1 **NAME:** HP-4
DEVICE: MS-FEC2611
MS/TP ADD: 08
LOCATION: GROUND FLOOR MECHANICAL ROOM

1 **NAME:** HP-1
DEVICE: MS-FEC2611
MS/TP ADD: 05
LOCATION: GROUND FLOOR CORRIDOR

GROUND FLOOR

FC TRUNK TERMINATION

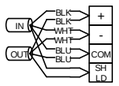

NOTE: GROUND SHIELD ONLY ONCE, AT THE NAE.

SA TRUNK TERMINATION

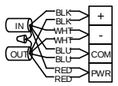

NOTE: GROUND SHIELD ONLY ONCE, AT THE FEU.

MSTP WIRING LEGEND

FC BUS – 22 AWG STRANDED, 3-WIRE TWISTED, SHIELDED CABLE

SA BUS – 22 AWG STRANDED, 4-WIRE, 2-TWISTED PAIR, SHIELDED CABLE

ETHERNET

IN CONSIDERATION OF THE RECEIPT OF THIS DOCUMENT, THE RECIPIENT AGREES NOT TO REPRODUCE, COPY, USE OR TRANSMIT THIS DOCUMENT AND/OR THE INFORMATION THEREIN CONTAINED, IN WHOLE OR IN PART, OR TO SUFFER SUCH ACTION BY OTHERS, FOR ANY PURPOSE, EXCEPT WITH THE ADVANCE WRITTEN PERMISSION OF JOHNSON CONTROLS, INC. AND FURTHER AGREES TO SURRENDER SAME TO JOHNSON CONTROLS, INC. UPON DEMAND.

COPYRIGHT JOHNSON CONTROLS, INC. 2019

Drawing Title

NETWORK RISER

REFERENCE DRAWING	NO.	REVISION-LOCATION	ECN	DATE	BY

Sales Engineer	Project Manager	Application Engineer	DRAWN BY	DRAWN DATE	APPROVED BY	APPROVED DATE
Dan S Levi	David D Thorne	CoEE				

Project Title

Cliff House
1090 Point Lobos Ave
San Francisco, CA 94121

Johnson Controls

Branch Information

Johnson Controls, Inc.
1615 Alvarado St.
San Leandro, CA 94577
Phone: 510-780-7700
Fax: 510-780-7711

CONTRACT NUMBER

9N0K-0074

DRAWING NUMBER

NR-1-2

HP-1&4 FLOW DIAGRAM

(TYPICAL OF 2)

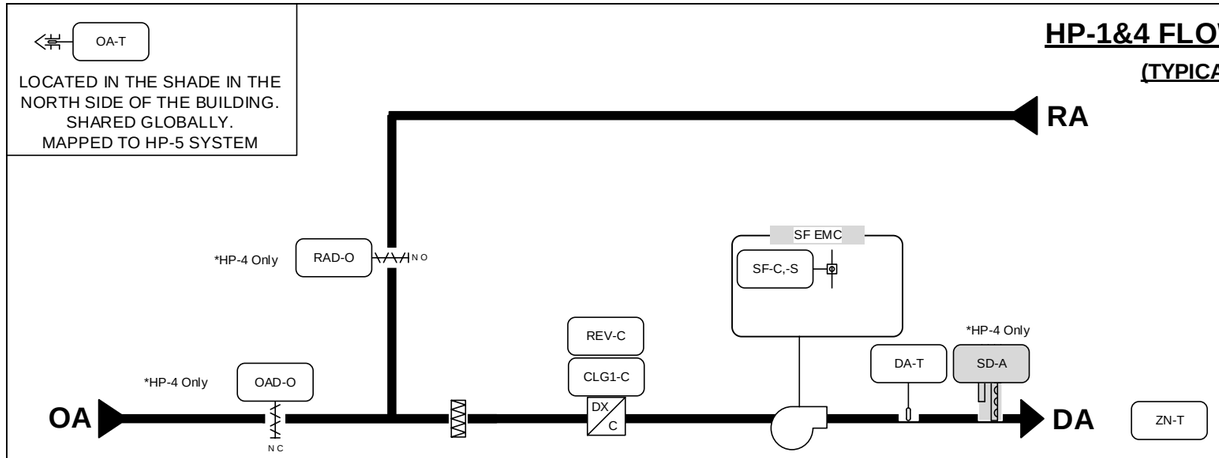

BILL OF MATERIALS

DESIGNATION	QTY	PART NUMBER	DESCRIPTION
FIELD DEVICES:			
DA-T	2	TE-6311M-1	8" 1000 OHM NI DUCT TEMP
SF-C,-S	2	CSDSC-C50100L1	CURR SW SELF CAL CLMP
ZN-T	2	NS-BTB7003-0	3X4.5.T.F/C.D.AJ.TB ADRS
RAD-O	1	M9310-HGA-2	DAMPER ACTUATORS 10 NM, NSR, 24 VAC/VDC
OAD-O	1	M9310-HGA-2	DAMPER ACTUATORS 10 NM, NSR, 24 VAC/VDC
RELY	10	RH2B-ULAC24V	IDEC DPDT 24VAC RELAY WITH INDICATOR
RELY SOCKET	10	SH2B-05	IDEC RELAY SOCKET DIN MOUNT
PANEL DEVICES:			
CONTROLLER	2	MS-FEC2611-0	FEC2611-0,FEC17

NOTE:

1. GRAY DEVICES ARE PROVIDED WITH UNIT OR PROVIDED BY OTHERS.

2. JCI WILL BE UTILIZING THE EXISTING PANEL TO PLACE THE NEW CONTROLLERS.

3. OAD-O & SF-O WILL MODULATE FOR BALANCING PURPOSE, IT WILL BE FIXED DURING BALANCING BY BALANCING CONTRACTOR.

HP SCHEDULE

TAG	CONDENSING UNIT	LOCATION	SERVING AREA	CAPACITY	SUPPLY FAN CFM	DAMPER CONROL
HP-1	CU-1	GROUND FLOOR CORRIDOR	GROUND FLOOR ADMIN & BACK OF HOUSE SPACES	5 TON	2075	MANUAL
HP-4	CU-4	GROUND FLOOR MECHANICAL ROOM	FIRST & SECOND FLOOR LOBBY	5 TON	1600	AUTOMATIC

TYPICAL WIRING FOR DUCT FIRE ALRM SAFETY SHUTDOWN

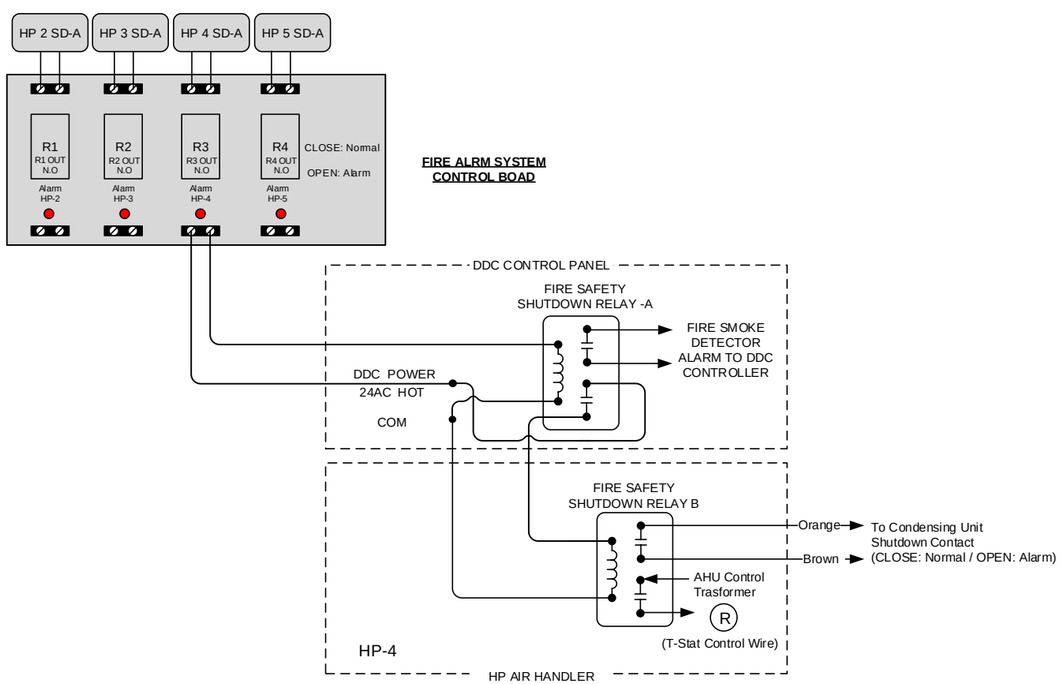

SEQUENCE OF OPERATION:

SUPPLY FAN CONTROL: THE SUPPLY FAN (SF-C) WILL BE STARTED BASED ON OCCUPANCY SCHEDULE (OCC-SCHEDULE). WHEN THE SUPPLY FAN STATUS (SF-S) INDICATES THE FAN STARTED, THE CONTROL SEQUENCE WILL BE ENABLED. UPON A LOSS OF AIRFLOW (SF-S), THE SYSTEM WILL ATTEMPT TO AUTOMATICALLY RESTART UNTIL POSITIVE STATUS IS RECEIVED. IF NO AIRFLOW (SF-S) AFTER 3 TIMES AUTOMATIC RESTART, (FAN-RESET) NEED MANFULLY RESET SUPPLY FAN CONTROL AFTER SITE CHECK

FULL RECIRCULATION MODE : WHEN UPON FULL RECIRCULATION ACTIVATION OF HARDWIRED SWITCH, ALL HEAT PUMP UNITS WILL ENTER FULL RECIRCULATION MODE ,THE OUTSIDE AIR DAMPER WILL BE COMMANDED CLOSED AND RETURN AIR DAMPERS WILL BE COMMANDED FULLY OPEN. WHEN THE HARDWIRED SWITCH IS DEACTIVATED, ALL HEAT PUMP UNITS WILL EXIT FULL RECIRCULATION MODE AND RETURN TO TAB SET POSITIONS FOR MINIMUM OUTSIDE AIRFLOW

HEAT PUMP CONTROL: WHEN THE ZONE TEMPERATURE (ZN-T) FALLS BELOW THE ZONE TEMPERATURE SETPOINT (ZN-SP) THE REVERSING VALVE (S) (REVX-H) WILL BE INDEXED TO PROVIDE HEATING WHEN THE COMPRESSOR IS RUNNING. WHEN THE ZONE TEMPERATURE (ZN-T) RISES ABOVE THE ZONE TEMPERATURE SETPOINT (ZN-SP) THE REVERSING VALVE (S) (REVX-C) WILL BE INDEXED TO PROVIDE COOLING WHEN THE COMPRESSOR IS RUNNING.

OCCUPIED MODE: THE OCCUPANCY MODE WILL BE CONTROLLED VIA A NETWORK INPUT (OCC-SCHEDULE). THE OCCUPANCY MODE CAN ALSO BE OVERRIDDEN BY A NETWORK INPUT (OCC-OVERRIDE).

UNOCCUPIED MODE: THE UNIT WILL REMAIN OFF DURING UNOCCUPIED PERIODS. AFTER HOURS ACTIVATION OF FULL SYSTEM FROM ANY THERMOSTAT FOR PRESET TIME INTERVAL (1HR ADJ)

UNIT ENABLE: A NETWORK UNIT ENABLE SIGNAL (UNITEN-MODE) WILL CONTROL THE MODE OF THE UNIT.

UNIT RESTART AFTER POWER SHUTDOWN:

TO RESTART HEAT PUMP FOLLOWING A SHUTDOWN. THE HEAT PUMP INDOOR AIR HANDLER AND CONDENSING UNIT WILL NEED TO HAVE MAIN POWER CYCLED OFF TO RESET MECHANICAL SYSTEM AT LOCAL DISCONNECTS. THEN, REESTABLISH POWER TO RESUME NORMAL AUTOMATIC CONTROL

ADDITIONAL POINTS MONITORED BY THE FMS:

- OUTDOOR AIR TEMPERATURE (OA-T)
- ZONE TEMPERATURE (ZN-T)
- FULL RECIRCULATION MODE

IN CONSIDERATION OF THE RECEIPT OF THIS DOCUMENT, THE RECIPIENT AGREES NOT TO REPRODUCE, COPY, USE OR TRANSMIT THIS DOCUMENT AND/OR THE INFORMATION THEREIN CONTAINED, IN WHOLE OR IN PART, OR TO SUFFER SUCH ACTION BY OTHERS, FOR ANY PURPOSE, EXCEPT WITH THE ADVANCE WRITTEN PERMISSION OF JOHNSON CONTROLS, INC. AND FURTHER AGREES TO SURRENDER SAME TO JOHNSON CONTROLS, INC. UPON DEMAND.

COPYRIGHT JOHNSON CONTROLS, INC. 2019

Drawing Title

HP-1&4 FLOW DIAGRAM

REFERENCE DRAWING	NO.	REVISION-LOCATION	ECN	DATE	BY
	3	REV.3 (AS-BUILT Drawing)		09/8/2020	JCI
	2	REV.2		05/03/2019	JCI

Sales Engineer	Project Manager	Application Engineer	DRAWN BY	DRAWN DATE	APPROVED BY	APPROVED DATE
Dan S Levi	David D Thorne	CoEE				

Project Title

Cliff House
1090 Point Lobos Ave
San Francisco, CA 94121

Johnson Controls

Branch Information
Johnson Controls, Inc.
1615 Alvarado St.
San Leandro, CA 94577
Phone: 510-780-7700
Fax: 510-780-7711

CONTRACT NUMBER **9N0K-0074**

DRAWING NUMBER **HP-1-1**

HP-1&4 POINT SCHEDULE

															Intermidate Device			Field Device				
Tag	Point Type	System Name	Object Name	Expanded ID	Controller Details	Trunk Type	Trunk Nbr	Trunk Addr.	Cable Destination Bay/Terminal	Termination Out	Panel	Panel Location	Cable Number	Wiring /Tubing	Termination In	Device	Termination Out	Wiring /Tubing	Termination In	Device	Ref Detail Shape	Comment
	HP-1										CP-HP-1	REFER SCHEDULES										
		HP-1			FEC 2611						CP-HP-1	REFER SCHEDULES										Power to Controller
		HP-1			FEC 2611						CP-HP-1	REFER SCHEDULES										BacNet FC Bus
	UI IN-1	HP-1	DA-T	Discharge Air Temperature	FEC 2611	MS/TP	1	11	UI IN-1	IN1, ICOM1	CP-HP-1	REFER SCHEDULES	HP1-11-UI IN-1					2/22	2-Wire	TE	F131	
	UI IN-2	HP-1			FEC 2611	MS/TP	1	11	UI IN-2		CP-HP-1	REFER SCHEDULES										
	UI IN-3	HP-1			FEC 2611	MS/TP	1	11	UI IN-3		CP-HP-1	REFER SCHEDULES										
	UI IN-4	HP-1			FEC 2611	MS/TP	1	11	UI IN-4		CP-HP-1	REFER SCHEDULES										
	UI IN-5	HP-1			FEC 2611	MS/TP	1	11	UI IN-5		CP-HP-1	REFER SCHEDULES										
	UI IN-6	HP-1			FEC 2611	MS/TP	1	11	UI IN-6		CP-HP-1	REFER SCHEDULES										
	BI IN-7	HP-1			FEC 2611	MS/TP	1	11	BI IN-7		CP-HP-1	REFER SCHEDULES										
	BI IN-8	HP-1	SF-S	Supply Fan Status	FEC 2611	MS/TP	1	11	BI IN-8	IN8, ICOM8	CP-HP-1	REFER SCHEDULES	HP1-11-BI IN-8	2/22	OUT,COM	Current Relay	Moto Lead	Motor Lead	See Wiring Detail	Motor Status (Contact)	F301	
	BO OUT-1	HP-1	SF-C	Supply Fan Command	FEC 2611	MS/TP	1	11	BO OUT-1	OUT1, 24V COM	CP-HP-1	REFER SCHEDULES	HP1-11-BO OUT-1	2/22	COIL-, COIL+	Relay	COM,NO	2/14	See Wiring Detail	Motor (Signle Phase)	F1030	
	BO OUT-2	HP-1			FEC 2611	MS/TP	1	11	BO OUT-2		CP-HP-1	REFER SCHEDULES										
	BO OUT-3	HP-1	Clg 1 Command	Clg Stage 1 Command	FEC 2611	MS/TP	1	11	BO OUT-3	OUT3, OCOM3	CP-HP-1	REFER SCHEDULES	HP1-11-BO OUT-3					9/22	R,Y1	Heat Pump Thermostat (COMP1)	F1051	
	CO OUT-4	HP-1	REV-C	Reversing Valve Command	FEC 2611	MS/TP	1	11	CO OUT-4	OUT4,OCOM4	CP-HP-1	REFER SCHEDULES	HP1-11-CO OUT-4					9/22	R,O1	Heat Pump Thermostat (REV VLV1)	F1051	
	CO OUT-5	HP-1			FEC 2611	MS/TP	1	11	CO OUT-5		CP-HP-1	REFER SCHEDULES										
	CO OUT-6	HP-1			FEC 2611	MS/TP	1	11	CO OUT-6		CP-HP-1	REFER SCHEDULES										
	CO OUT-7	HP-1			FEC 2611	MS/TP	1	11	CO OUT-7		CP-HP-1	REFER SCHEDULES										
	AO OUT-8	HP-1			FEC 2611	MS/TP	1	11	AO OUT-8		CP-HP-1	REFER SCHEDULES										
	AO OUT-9	HP-1			FEC 2611	MS/TP	1	11	AO OUT-9		CP-HP-1	REFER SCHEDULES										
		HP-1			FEC 2611						CP-HP-1	REFER SCHEDULES										
		HP-1			FEC 2611	SA Bus	1	203			CP-HP-1	REFER SCHEDULES										BacNet SA Bus
	STAT	HP-1	ZN-T	Zone Temperature	FEC 2611	SA Bus	1	203	STAT	+,-,COM,SA PWR	CP-HP-1	REFER SCHEDULES	11-HP1-203-STAT					4/22	+,-,COM,SA PWR	NetSensor (Term,Addressable)	NS102	

															Intermidate Device			Field Device				
Tag	Point Type	System Name	Object Name	Expanded ID	Controller Details	Trunk Type	Trunk Nbr	Trunk Addr.	Cable Destination Bay/Terminal	Termination Out	Panel	Panel Location	Cable Number	Wiring /Tubing	Termination In	Device	Termination Out	Wiring /Tubing	Termination In	Device	Ref Detail Shape	Comment
	HP-4										CP-HP-4	REFER SCHEDULES										
		HP-4			FEC 2611						CP-HP-4	REFER SCHEDULES										Power to Controller
		HP-4			FEC 2611						CP-HP-4	REFER SCHEDULES										BacNet FC Bus
	UI IN-1	HP-4	DA-T	Discharge Air Temperature	FEC 2611	MS/TP	1	10	UI IN-1	IN1, ICOM1	CP-HP-4	REFER SCHEDULES	HP4-10-UI IN-1					2/22	2-Wire	TE	F131	
	UI IN-2	HP-4			FEC 2611	MS/TP	1	10	UI IN-2		CP-HP-4	REFER SCHEDULES										
	UI IN-3	HP-4			FEC 2611	MS/TP	1	10	UI IN-3		CP-HP-4	REFER SCHEDULES										
	UI IN-4	HP-4			FEC 2611	MS/TP	1	10	UI IN-4		CP-HP-4	REFER SCHEDULES										
	UI IN-5	HP-4			FEC 2611	MS/TP	1	10	UI IN-5		CP-HP-4	REFER SCHEDULES										
	UI IN-6	HP-4			FEC 2611	MS/TP	1	10	UI IN-6		CP-HP-4	REFER SCHEDULES										
	BI IN-7	HP-4	SA-SD	Supply Air Smoke Detector	FEC 2611	MS/TP	1	10	BI IN-7	IN7, ICOM7	CP-HP-4	REFER SCHEDULES	HP4-10-BI IN-7	2/22	OUT,COM	Safety Relay	Smoke Detector	2/22	See Wiring Detail	Smoke Detector Alarm (Contact)	F1030	
	BI IN-8	HP-4	SF-S	Supply Fan Status	FEC 2611	MS/TP	1	10	BI IN-8	IN8, ICOM8	CP-HP-4	REFER SCHEDULES	HP4-10-BI IN-8	2/22	OUT,COM	Current Relay	Moto Lead	Motor Lead	See Wiring Detail	Motor Status (Contact)	F301	
	BO OUT-1	HP-4	SF-C	Supply Fan Command	FEC 2611	MS/TP	1	10	BO OUT-1	OUT1, 24V COM	CP-HP-4	REFER SCHEDULES	HP4-10-BO OUT-1	2/22	COIL-, COIL+	Relay	COM,NO	2/14	See Wiring Detail	Motor (Signle Phase)	F1030	
	BO OUT-2	HP-4			FEC 2611	MS/TP	1	10	BO OUT-2		CP-HP-4	REFER SCHEDULES										
	BO OUT-3	HP-4	Clg 1 Command	Clg Stage 1 Command	FEC 2611	MS/TP	1	10	BO OUT-3	OUT3, OCOM3	CP-HP-4	REFER SCHEDULES	HP4-10-BO OUT-3					9/22	R,Y1	Heat Pump Thermostat (COMP1)	F1051	
	CO OUT-4	HP-4	REV-C	Reversing Valve Command	FEC 2611	MS/TP	1	10	CO OUT-4	OUT4,OCOM4	CP-HP-4	REFER SCHEDULES	HP4-10-CO OUT-4					9/22	R,O1	Heat Pump Thermostat (REV VLV1)	F1051	
	CO OUT-5	HP-4			FEC 2611	MS/TP	1	10	CO OUT-5		CP-HP-4	REFER SCHEDULES										
	CO OUT-6	HP-4			FEC 2611	MS/TP	1	10	CO OUT-6		CP-HP-4	REFER SCHEDULES										
	CO OUT-7	HP-4			FEC 2611	MS/TP	1	10	CO OUT-7		CP-HP-4	REFER SCHEDULES										
	AO OUT-8	HP-4	OAD	OA Damper Output	FEC 2611	MS/TP	1	10	AO OUT-8	OUT8, OCOM4,24VAC ,COM	CP-HP-4	REFER SCHEDULES	HP4-10-AO OUT-8					2/22 / 2/18	3, 1/1, 2	M9310-HGA-2 (Ext Source)	F233	
	AO OUT-9	HP-4	RAD	RA Damper Output	FEC 2611	MS/TP	1	10	AO OUT-9	OUT9, OCOM4,24VAC ,COM	CP-HP-4	REFER SCHEDULES	HP4-10-AO OUT-9					2/22 / 2/18	3, 1/1, 2	M9310-HGA-2 (Ext Source)	F233	
		HP-4			FEC 2611						CP-HP-4	REFER SCHEDULES										
		HP-4			FEC 2611	SA Bus	1	200			CP-HP-4	REFER SCHEDULES										BacNet SA Bus
	STAT	HP-4	ZN-T	Zone Temperature	FEC 2611	SA Bus	1	200	STAT	+,-,COM,SA PWR	CP-HP-4	REFER SCHEDULES	10-HP4-200-STAT					4/22	+,-,COM,SA PWR	NetSensor (Term,Addressable)	NS102	

IN CONSIDERATION OF THE RECEIPT OF THIS DOCUMENT, THE RECIPIENT AGREES NOT TO REPRODUCE, COPY, USE OR TRANSMIT THIS DOCUMENT AND/OR THE INFORMATION THEREIN CONTAINED, IN WHOLE OR IN PART, OR TO SUFFER SUCH ACTION BY OTHERS, FOR ANY PURPOSE, EXCEPT WITH THE ADVANCE WRITTEN PERMISSION OF JOHNSON CONTROLS, INC. AND FURTHER AGREES TO SURRENDER SAME TO JOHNSON CONTROLS, INC. UPON DEMAND.

COPYRIGHT JOHNSON CONTROLS, INC. 2019

Drawing Title

HP-1&4 POINT SCHEDULE

REFERENCE DRAWING	NO.	REVISION-LOCATION	ECN	DATE	BY
	3	REV.3 (AS-BUILT Drawing)		07/28/2020	JCI

Sales Engineer	Project Manager	Application Engineer	DRAWN BY	DRAWN DATE	APPROVED BY	APPROVED DATE
Dan S Levi	David D Thorne	CoEE				

Project Title

Cliff House
1090 Point Lobos Ave
San Francisco, CA 94121

Johnson Controls

Branch Information

Johnson Controls, Inc.
1615 Alvarado St.
San Leandro, CA 94577
Phone: 510-780-7700
Fax: 510-780-7711

CONTRACT NUMBER

9N0K-0074

DRAWING NUMBER

HP-1-2

HP-1&4 WIRING DETAILS

DETAIL F131 TEMPERATURE SENSOR INPUT

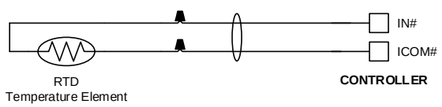

DETAIL F201 ANALOG OUTPUT (VOLTAGE)

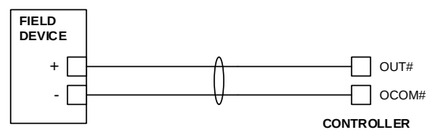

DETAIL F233 0-10VDC OUTPUT to M9310-HGA-2

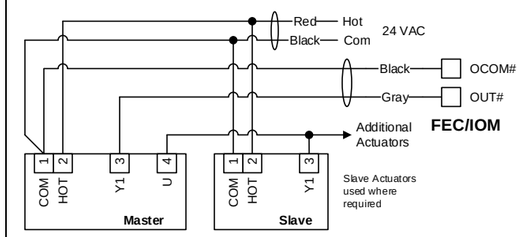

DETAIL F301 BINARY INPUT (DRY CONTACT)

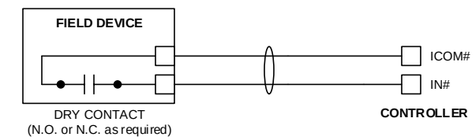

DETAIL F1051 Conventional Thermostat Interface Wiring for Heat Pump

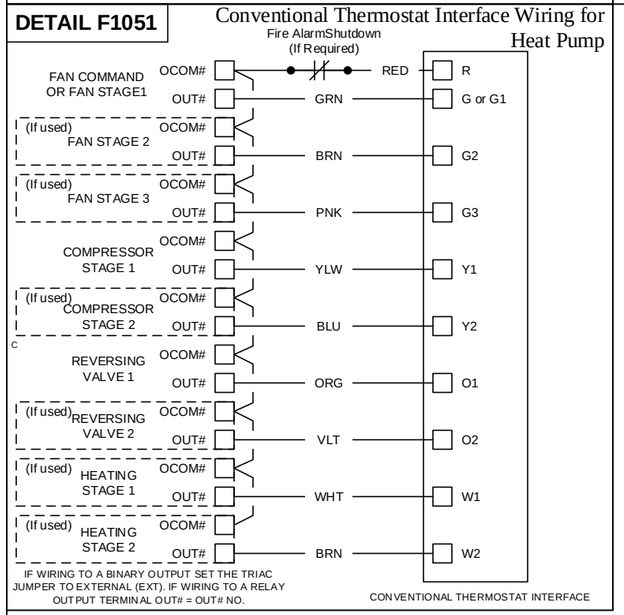

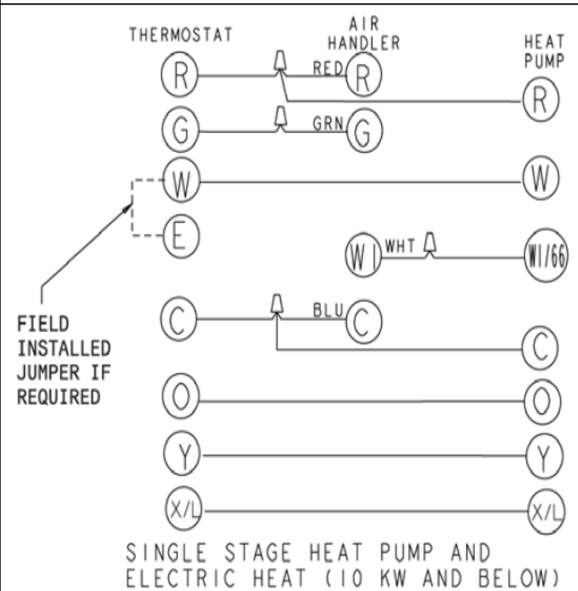

DETAIL F1030 Single Phase Motor Wiring

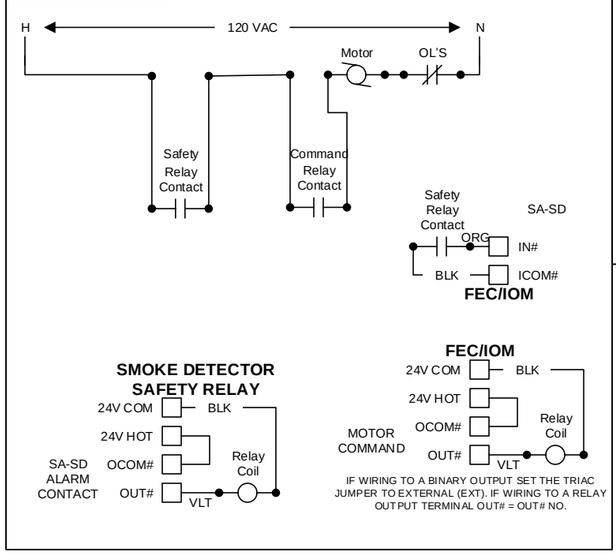

DETAIL NS102 NET STAT WITH TERMINALS ADDRESSABLE

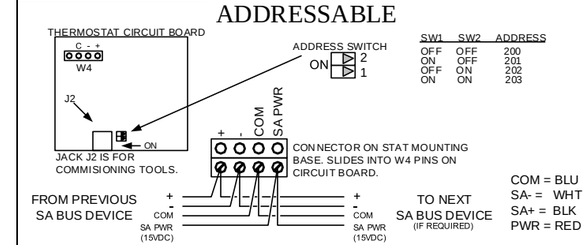

IN CONSIDERATION OF THE RECEIPT OF THIS DOCUMENT, THE RECIPIENT AGREES NOT TO REPRODUCE, COPY, USE OR TRANSMIT THIS DOCUMENT AND/OR THE INFORMATION THEREIN CONTAINED, IN WHOLE OR IN PART, OR TO SUFFER SUCH ACTION BY OTHERS, FOR ANY PURPOSE, EXCEPT WITH THE ADVANCE WRITTEN PERMISSION OF JOHNSON CONTROLS, INC. AND FURTHER AGREES TO SURRENDER SAME TO JOHNSON CONTROLS, INC. UPON DEMAND.

COPYRIGHT JOHNSON CONTROLS, INC. 2019

Drawing Title

HP-1&4 WIRING DETAILS

REFERENCE DRAWING	NO.	REVISION-LOCATION	ECN	DATE	BY
	3	REV.3 (AS-BUILT Drawing)		07/28/2020	JCI

Sales Engineer	Project Manager	Application Engineer	DRAWN BY	DRAWN DATE	APPROVED BY	APPROVED DATE
Dan S Levi	David D Thorne	CoEE				

Project Title

Cliff House
1090 Point Lobos Ave
San Francisco, CA 94121

Branch Information

Johnson Controls, Inc.
1615 Alvarado St.
San Leandro, CA 94577
Phone: 510-780-7700
Fax: 510-780-7711

CONTRACT NUMBER

9N0K-0074

DRAWING NUMBER

HP-1-3

HP-1&4 CONTROLLER WIRING DETAILS

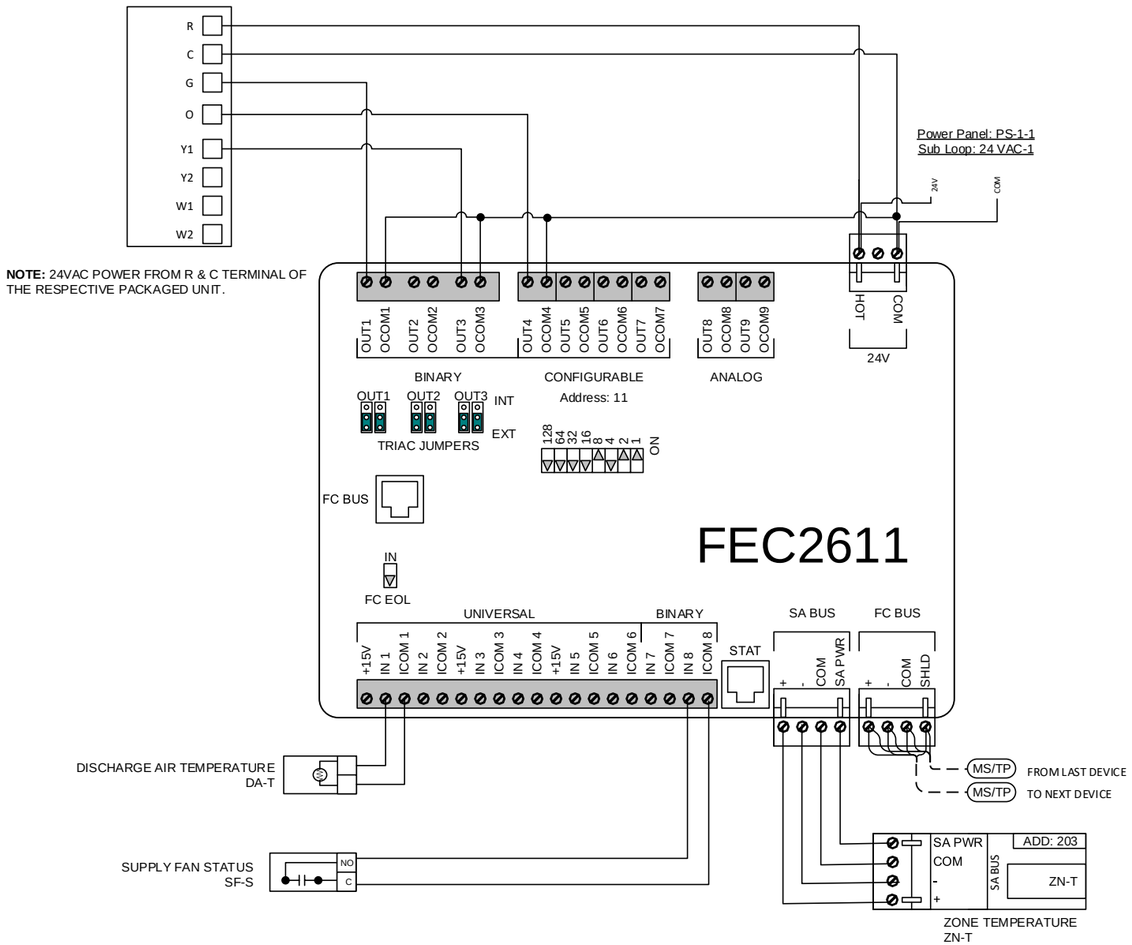

HP-1

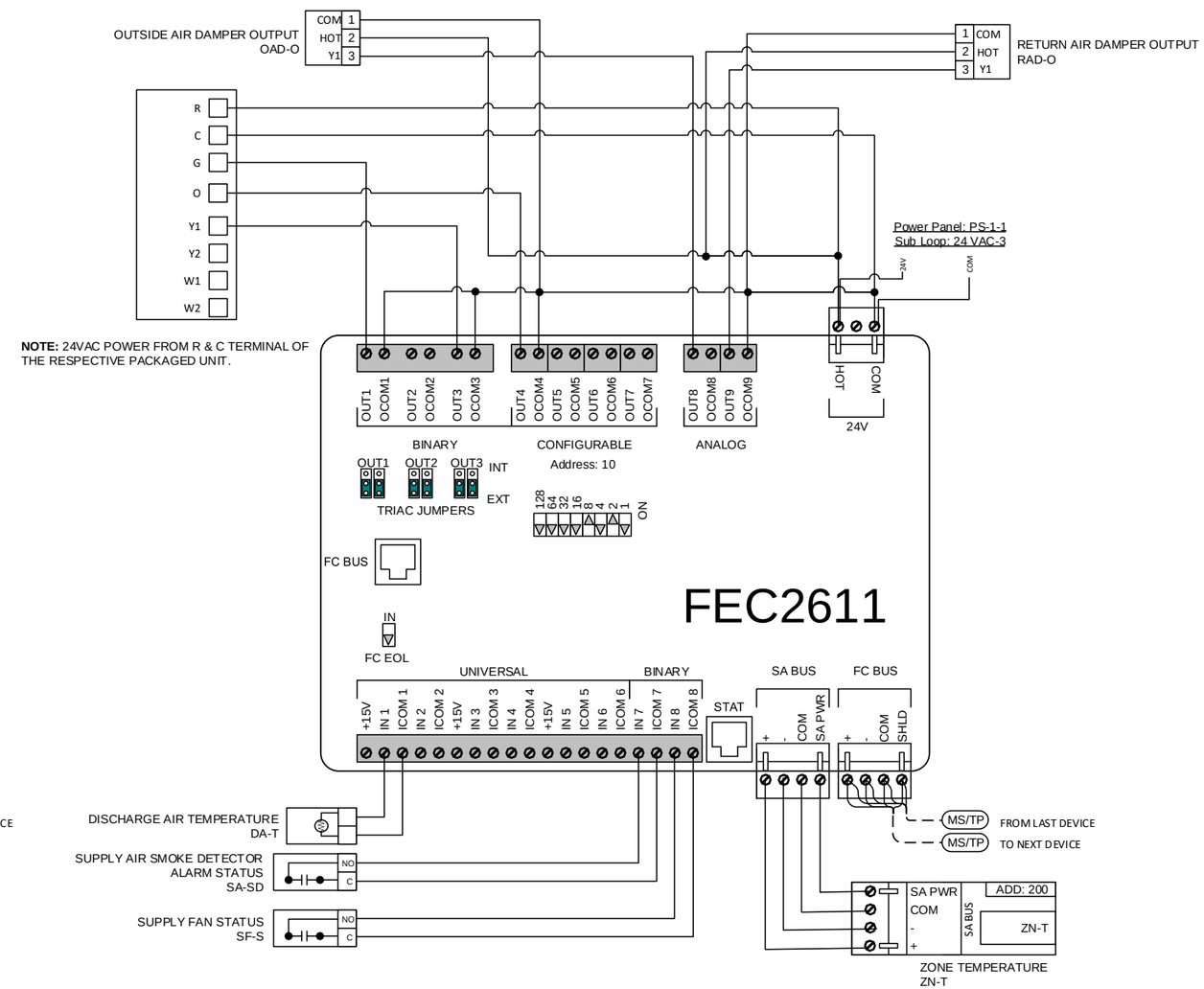

HP-4

IN CONSIDERATION OF THE RECEIPT OF THIS DOCUMENT, THE RECIPIENT AGREES NOT TO REPRODUCE, COPY, USE OR TRANSMIT THIS DOCUMENT AND/OR THE INFORMATION THEREIN CONTAINED, IN WHOLE OR IN PART, OR TO SUFFER SUCH ACTION BY OTHERS, FOR ANY PURPOSE, EXCEPT WITH THE ADVANCE WRITTEN PERMISSION OF JOHNSON CONTROLS, INC. AND FURTHER AGREES TO SURRENDER SAME TO JOHNSON CONTROLS, INC. UPON DEMAND.

COPYRIGHT JOHNSON CONTROLS, INC. 2019

Drawing Title
HP-1&4 CONTROLLER WIRING DETAILS

REFERENCE DRAWING	NO.	REVISION-LOCATION	ECN	DATE	BY
	3	REV.3 (AS-BUILT Drawing)		07/28/2020	JCI

Sales Engineer	Project Manager	Application Engineer	DRAWN BY	DRAWN DATE	APPROVED BY	APPROVED DATE
Dan S Levi	David D Thorne	CoEE				

Project Title
Cliff House
1090 Point Lobos Ave
San Francisco, CA 94121

Branch Information
Johnson Controls, Inc.
1615 Alvarado St.
San Leandro, CA 94577
Phone: 510-780-7700
Fax: 510-780-7711

CONTRACT NUMBER
9N0K-0074

DRAWING NUMBER
HP-1-4

HP-2,3 FLOW DIAGRAM

(TYPICAL OF 2)

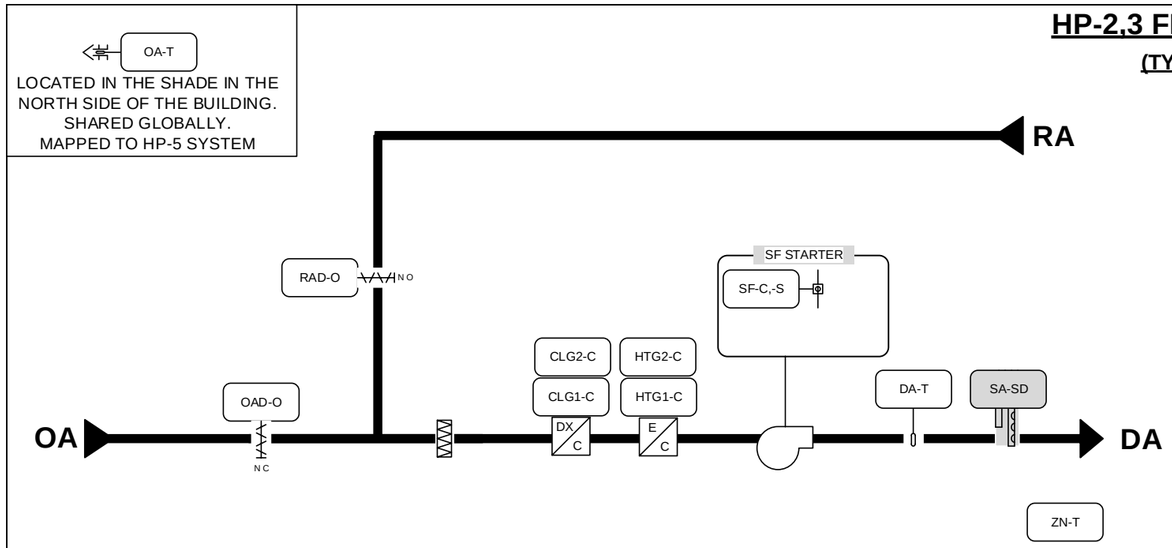

BILL OF MATERIALS

Designation	Qty	Part Number	Description
Field Devices:			
DA-T	2	TE-6311M-1	8" 1000 OHM NI DUCT TEMP
SF-C,-S	2	CSDSC-C50100L1	CURR SW SELF CAL CLMP
ZN-T	2	NS-BTB7003-0	3X4.5.T.F/C.D.AJ.TB ADRS
RAD-O	2	M9310-HGA-2	DAMPER ACTUATORS 10 NM, NSR, 24 VAC/VDC
OAD-O	2	M9310-HGA-2	DAMPER ACTUATORS 10 NM, NSR, 24 VAC/VDC
RELY	14	RH2B-ULAC24V	IDEC DPDT 24VAC RELAY WITH INDICATOR
RELY SOCKET	14	SH2B-05	IDEC RELAY SOCKET DIN MOUNT
Panel Devices:			
CONTROLLER	2	MS-FEC2611-0	FEC2611-0,FEC17

NOTE:

1. GRAY DEVICES ARE PROVIDED WITH UNIT OR PROVIDED BY OTHERS.

2. JCI WILL BE UTILIZING THE EXISTING PANEL TO PLACE THE NEW CONTROLLERS.

3. OAD-O & SF-O WILL MODULATE FOR BALANCING PURPOSE, IT WILL BE FIXED DURING BALANCING BY BALANCING CONTRACTOR.

HP SCHEDULE					
TAG	CONDENSING UNIT	LOCATION	SERVING AREA	CAPACITY	SUPPLY FAN CFM
HP-2	CU-2	GROUND FLOOR MECHANICAL ROOM	FIRST FLOOR BANQUET ROOM	15 TON	2075
HP-3	CU-3	GROUND FLOOR MECHANICAL ROOM	SECOND FLOOR BISTRO & DINING ROOM	15 TON	1600

TYPICAL WIRING FOR DUCT FIRE ALRM SAFETY SHUTDOWN

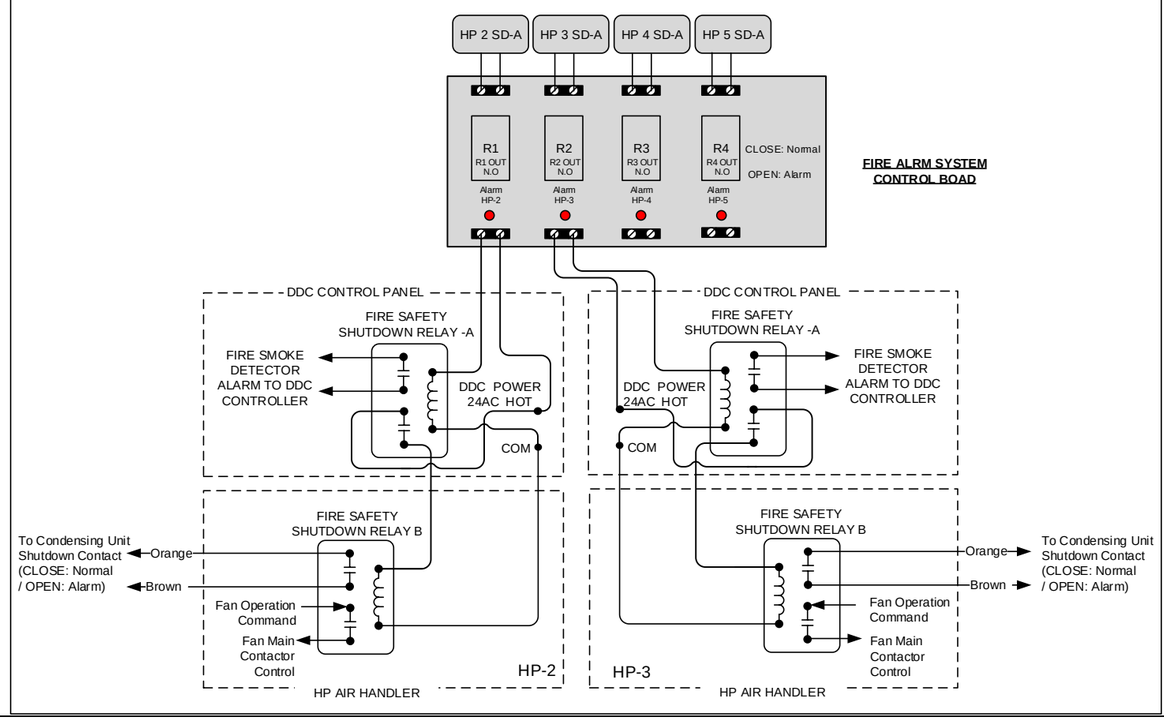

SEQUENCE OF OPERATION:

SUPPLY FAN CONTROL: THE CONSTANT SPEED SUPPLY FAN (SF-C) WILL BE STARTED BASED ON OCCUPANCY SCHEDULE. WHEN THE SUPPLY FAN STATUS (SF-S) INDICATES THE FAN STARTED, THE CONTROL SEQUENCE WILL BE ENABLED. UPON A LOSS OF AIRFLOW (SF-S), THE SYSTEM WILL ATTEMPT TO AUTOMATICALLY RESTART UNTIL POSITIVE STATUS IS RECEIVED. IF NO AIRFLOW (SF-S) AFTER 3 TIMES AUTOMATIC RESTART, (FAN-RESET) NEED MANFULLY RESET SUPPLY FAN CONTROL AFTER SITE CHECK

FULL RECIRCULATION MODE : WHEN UPON FULL RECIRCULATION ACTIVATION OF HARDWIRED SWITCH, ALL HEAT PUMP UNITS WILL ENTER FULL RECIRCULATION MODE ,THE OUTSIDE AIR DAMPER WILL BE COMMANDED CLOSED AND RETURN AIR DAMPERS WILL BE COMMANDED FULLY OPEN. WHEN THE HARDWIRED SWITCH IS DEACTIVATED, ALL HEAT PUMP UNITS WILL EXIT FULL RECIRCULATION MODE AND RETURN TO TAB SET POSITIONS FOR MINIMUM OUTSIDE AIRFLOW

HEAT PUMP CONTROL: WHEN THE ZONE TEMPERATURE (ZN-T) FALLS BELOW THE ZONE TEMPERATURE SETPOINT (ZN-SP) THE HEATING STAGE 1 (HTG1-C) WILL BE INDEXED TO PROVIDE HEATING AND STAGE ON TO STAG 2 (HTG2-C) IF NEED MORE HEATING CAPACITY. WHEN THE ZONE TEMPERATURE (ZN-T) RISES ABOVE THE ZONE TEMPERATURE SETPOINT (ZN-SP) THE COOLING STAGE (CLG1-C) WIL BE INDEXED TO PROVIDE COOLING AND STAGE ON TO STAG 2 (CLG2-C) IF NEED MORE COOLING CAPACITY.

OCCUPIED MODE: THE OCCUPANCY MODE WILL BE CONTROLLED VIA A NETWORK INPUT (OCC-SCHEDULE). THE OCCUPANCY MODE CAN ALSO BE OVERRIDDEN BY A NETWORK INPUT (OCC-OVERRIDE).

UNOCCUPIED MODE: THE UNIT WILL REMAIN OFF DURING UNOCCUPIED PERIODS. AFTER HOURS ACTIVATION OF FULL SYSTEM FROM ANY THERMOSTAT FOR PRESET TIME INTERVAL (1HR ADJ)

REHEAT COIL: THE REHEAT COIL (HTGX-C) WILL BE STAGED IN SEQUENCE TO MAINTAIN THE TEMPERATURE SETPOINT. SUPPLEMENTAL HEATING STAGES WILL BE DISABLED VIA SOFTWARE , IF DA-T REACHES TO 100 DEG F.

UNIT ENABLE: A NETWORK UNIT ENABLE SIGNAL (UNITEN-MODE) WILL CONTROL THE MODE OF THE UNIT

UNIT RESTART AFTER POWER SHUTDOWN:

TO RESTART HEAT PUMP FOLLOWING A SHUTDOWN. THE HEAT PUMP INDOOR AIR HANDLER AND CONDENSING UNIT WILL NEED TO HAVE MAIN POWER CYCLED OFF TO RESET MECHANICAL SYSTEM AT LOCAL DISCONNECTS. THEN, REESTABLISH POWER TO RESUME NORMAL AUTOMATIC CONTROL

ADDITIONAL POINTS MONITORED BY THE FMS:

- OUTDOOR AIR TEMPERATURE (OA-T)
- ZONE TEMPERATURE (ZN-T)
- FULL RECIRCULATION MODE

IN CONSIDERATION OF THE RECEIPT OF THIS DOCUMENT, THE RECIPIENT AGREES NOT TO REPRODUCE, COPY, USE OR TRANSMIT THIS DOCUMENT AND/OR THE INFORMATION THEREIN CONTAINED, IN WHOLE OR IN PART, OR TO SUFFER SUCH ACTION BY OTHERS, FOR ANY PURPOSE, EXCEPT WITH THE ADVANCE WRITTEN PERMISSION OF JOHNSON CONTROLS, INC. AND FURTHER AGREES TO SURRENDER SAME TO JOHNSON CONTROLS, INC. UPON DEMAND.

COPYRIGHT JOHNSON CONTROLS, INC. 2019

Drawing Title

HP-2,3 FLOW DIAGRAM

REFERENCE DRAWING	NO.	REVISION-LOCATION	ECN	DATE	BY
	3	REV.3 (AS-BUILT Drawing)		09/08/2020	JCI
	2	REV.2		05/03/2019	JCI

Sales Engineer	Project Manager	Application Engineer	DRAWN BY	DRAWN DATE	APPROVED BY	APPROVED DATE
Dan S Levi	David D Thorne	CoEE				

Project Title

Cliff House
1090 Point Lobos Ave
San Francisco, CA 94121

Johnson Controls

Branch Information

Johnson Controls, Inc.
1615 Alvarado St.
San Leandro, CA 94577
Phone: 510-780-7700
Fax: 510-780-7711

CONTRACT NUMBER **9N0K-0074**

DRAWING NUMBER **HP-1-5**

Electrician/Fi	Point Information			Controller Information						Panel Information			Intermediate Device				Field Device				
Point Type	System Name	Object Name	Expanded ID	Controller Details	Trunk Type	Trunk Nbr	Trunk Addr.	Cable Destination Bay/Terminal	Termination Out	Panel	Panel Location	Cable Number	Wiring /Tubing	Termination In	Device	Termination Out	Wiring /Tubing	Termination In	Device	Ref Detail Shape	Comment
	HP-x			FEC 2611						CP-HPx	REFER SCHEDULES										Power to Controller
	HP-x			FEC 2611	MS/TP	*	*			CP-HPx	REFER SCHEDULES										BacNet FC Bus
UI IN-1	HP-x	DA-T	Discharge Air Temp	FEC 2611	MS/TP	*	*	UI IN-1	IN1, ICOM1	CP-HPx	REFER SCHEDULES	HPx-4-UI IN-1					2/22	2-Wire	TE	F131	
UI IN-2	HP-x			FEC 2611	MS/TP	*	*	UI IN-2		CP-HPx	REFER SCHEDULES	HPx-4-UI IN-2									
UI IN-3	HP-x			FEC 2611	MS/TP	*	*	UI IN-3		CP-HPx	REFER SCHEDULES	HPx-4-UI IN-3									
UI IN-4	HP-x			FEC 2611	MS/TP	*	*	UI IN-4		CP-HPx	REFER SCHEDULES	HPx-4-UI IN-4									
UI IN-5	HP-x			FEC 2611	MS/TP	*	*	UI IN-5		CP-HPx	REFER SCHEDULES	HPx-4-UI IN-5									
UI IN-6	HP-x			FEC 2611	MS/TP	*	*	UI IN-6		CP-HPx	REFER SCHEDULES	HPx-4-UI IN-6									
BI IN-7	HP-x	SA-SD	Supply Air Smoke Detector	FEC 2611	MS/TP	*	*	BI IN-7	IN7, ICOM7	CP-HPx	REFER SCHEDULES	HPx-4-BI IN-7	2/22	OUT,COM	Safety Relay	Smoke Detector	2/22	See Wiring Detail	Smoke Detector Alarm (Contact)	F1030	
BI IN-8	HP-x	SF-S	Supply Fan Status	FEC 2611	MS/TP	*	*	BI IN-8	IN8, ICOM8	CP-HPx	REFER SCHEDULES	HPx-4-BI IN-8	2/22	OUT,COM	Current Relay	Moto Lead	Motor Lead	See Wiring Detail	Motor Status (Contact)	F301	
BO OUT-1	HP-x	SF-C	Supply Fan Command	FEC 2611	MS/TP	*	*	BO OUT-1	OUT1, 24V COM	CP-HPx	REFER SCHEDULES	HPx-4-BO OUT-1	2/22	COIL-, COIL+	Relay	COM,NO	2/14	See Wiring Detail	Motor (Signle Phase)	F1030	
BO OUT-2	HP-x	HTG1-C	Htg Stage 1 Command	FEC 2611	MS/TP	*	*	BO OUT-2	OCOM2,OUT2	CP-HPx	REFER SCHEDULES	HPx-4-BO OUT-2					9/22	R,W1	Heat Pump Thermostat (HTG1)	F1051	
BO OUT-3	HP-x	HTG1-C	Htg Stage 1 Command	FEC 2611	MS/TP	*	*	BO OUT-3	OCOM3,OUT3	CP-HPx	REFER SCHEDULES	HPx-4-BO OUT-3					9/22	R,W2	Heat Pump Thermostat (HTG2)	F1051	
CO OUT-4	HP-x	CLG1-C	Clg Stage 1 Command	FEC 2611	MS/TP	*	*	CO OUT-4	OCOM4,OUT4	CP-HPx	REFER SCHEDULES	HPx-4-CO OUT-4					9/22	R,Y1	Heat Pump Thermostat (CLG1)	F1051	
CO OUT-5	HP-x	CLG2-C	Clg Stage 1 Command	FEC 2611	MS/TP	*	*	CO OUT-5	OCOM5,OUT5	CP-HPx	REFER SCHEDULES	HPx-4-CO OUT-5					9/22	R,Y2	Heat Pump Thermostat (CLG2)	F1051	
CO OUT-6	HP-x			FEC 2611	MS/TP	*	*	CO OUT-6		CP-HPx	REFER SCHEDULES	HPx-4-CO OUT-6									
CO OUT-7	HP-x			FEC 2611	MS/TP	*	*	CO OUT-7		CP-HPx	REFER SCHEDULES	HPx-4-CO OUT-7									
AO OUT-8	HP-x	OAD-O	OA Damper Output	FEC 2611	MS/TP	*	*	AO OUT-8	OUT4, OCOM4,24VAC ,COM	CP-HPx	REFER SCHEDULES	HPx-4-AO OUT-8					2/22 / 2/18	3, 1/1, 2	M9310-HGA-2 (Ext Source)	F233	
AO OUT-9	HP-x	RAD-O	RA Damper Output	FEC 2611	MS/TP	*	*	AO OUT-9	OUT5, OCOM5,24VAC ,COM	CP-HPx	REFER SCHEDULES	HPx-4-AO OUT-9					2/22 / 2/18	3, 1/1, 2	M9310-HGA-2 (Ext Source)	F233	
	HP-x			NET STAT						CP-HPx	REFER SCHEDULES										
	HP-x			NET STAT	SA Bus	*	200			CP-HPx	REFER SCHEDULES										BacNet SA Bus
STAT	HP-x	ZN-T	Zone Temperature	NET STAT	SA Bus	*	200	STAT	+,-,COM,SA PWR	CP-HPx	REFER SCHEDULES	4-HPx-200-STAT					4/22	+,-,COM,SA PWR	NetSensor (Term,Addressable)	NS102	

NOTE(*) REFER RISER DRAWINGS FOR MS/TP TRUNK ID & ADDRESS **THE ABOVE POINT SCHEDULE IS TYPICAL FOR HP-2 & HP-3**

DETAIL F131 TEMPERATURE SENSOR INPUT

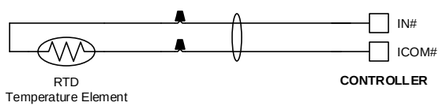

DETAIL F1030 Single Phase Motor Wiring

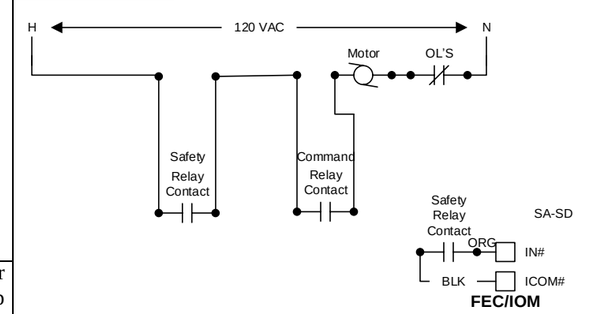

DETAIL F233 0-10VDC OUTPUT to M9310-HGA-2

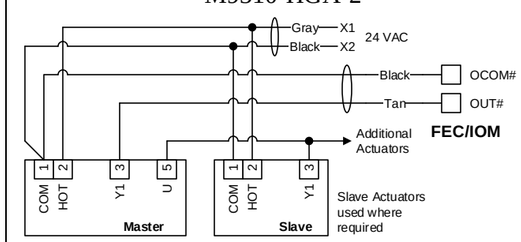

DETAIL F301 BINARY INPUT (DRY CONTACT)

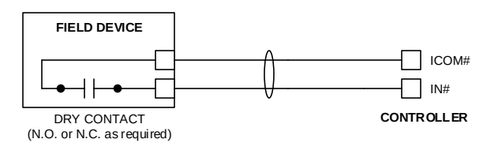

DETAIL F1051 Conventional Thermostat Interface Wiring for Heat Pump

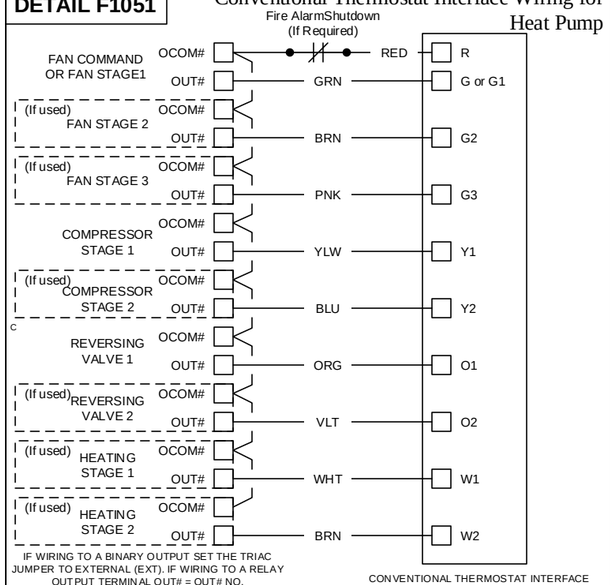

DETAIL NS102 NET STAT WITH TERMINALS ADDRESSABLE

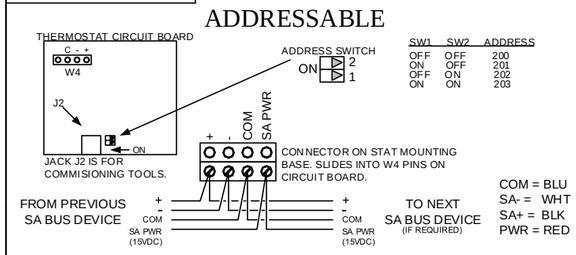

SMOKE DETECTOR SAFETY RELAY

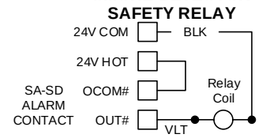

FEC/IOM

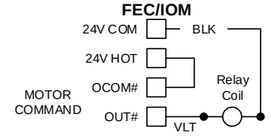

IF WIRING TO A BINARY OUTPUT SET THE TRIAC JUMPER TO EXTERNAL (EXT). IF WIRING TO A RELAY OUTPUT TERMINAL OUT# = OUT# NO.

IN CONSIDERATION OF THE RECEIPT OF THIS DOCUMENT, THE RECIPIENT AGREES NOT TO REPRODUCE, COPY, USE OR TRANSMIT THIS DOCUMENT AND/OR THE INFORMATION THEREIN CONTAINED, IN WHOLE OR IN PART, OR TO SUFFER SUCH ACTION BY OTHERS, FOR ANY PURPOSE, EXCEPT WITH THE ADVANCE WRITTEN PERMISSION OF JOHNSON CONTROLS, INC. AND FURTHER AGREES TO SURRENDER SAME TO JOHNSON CONTROLS, INC. UPON DEMAND.

COPYRIGHT JOHNSON CONTROLS, INC. 2019

Drawing Title
HP-2&3 POINT SCHEDULE & WIRING DETAILS

Project Title
Cliff House
1090 Point Lobos Ave
San Francisco, CA 94121

REFERENCE DRAWING	NO.	REVISION-LOCATION	ECN	DATE	BY
	3	REV.3 (AS-BUILT Drawing)		07/28/2020	JCI

Sales Engineer	Project Manager	Application Engineer	DRAWN BY	DRAWN DATE	APPROVED BY	APPROVED DATE
Dan S Levi	David D Thorne	CoEE				

Branch Information
Johnson Controls, Inc.
1615 Alvarado St.
San Leandro, CA 94577
Phone: 510-780-7700
Fax: 510-780-7711

CONTRACT NUMBER **9N0K-0074**

DRAWING NUMBER **HP-1-5**

HP-2&3 CONTROLLER WIRING DETAILS

(TYPICAL OF 02)

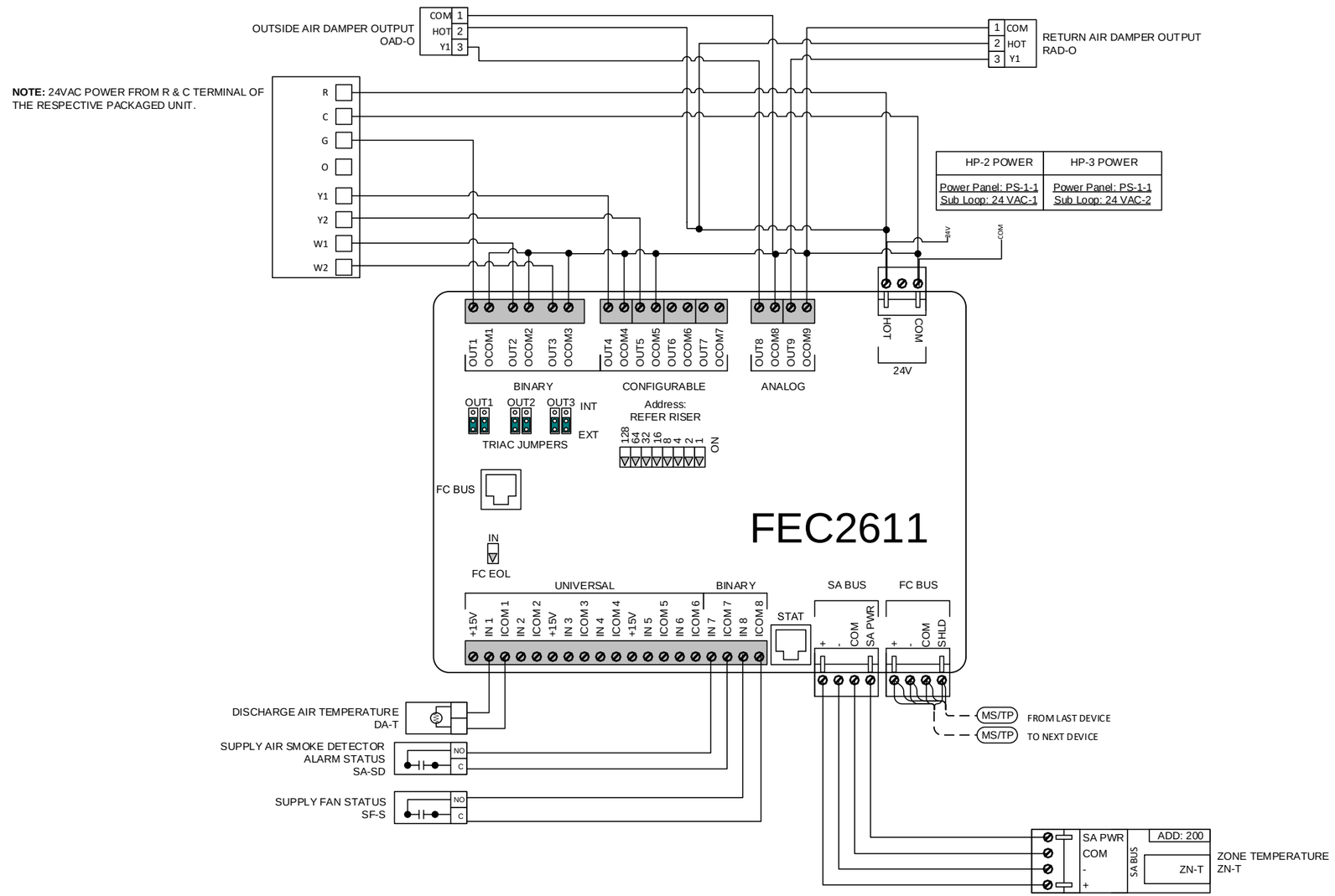

IN CONSIDERATION OF THE RECEIPT OF THIS DOCUMENT, THE RECIPIENT AGREES NOT TO REPRODUCE, COPY, USE OR TRANSMIT THIS DOCUMENT AND/OR THE INFORMATION THEREIN CONTAINED, IN WHOLE OR IN PART, OR TO SUFFER SUCH ACTION BY OTHERS, FOR ANY PURPOSE, EXCEPT WITH THE ADVANCE WRITTEN PERMISSION OF JOHNSON CONTROLS, INC. AND FURTHER AGREES TO SURRENDER SAME TO JOHNSON CONTROLS, INC. UPON DEMAND.

COPYRIGHT JOHNSON CONTROLS, INC. 2019

Drawing Title
HP-2&3 CONTROLLER WIRING DETAILS

REFERENCE DRAWING	NO.	REVISION-LOCATION	ECN	DATE	BY
	3	REV.3 (AS-BUILT Drawing)		07/28/2020	JCI

Sales Engineer	Project Manager	Application Engineer	DRAWN BY	DRAWN DATE	APPROVED BY	APPROVED DATE
Dan S Levi	David D Thorne	CoEE				

Project Title
Cliff House
1090 Point Lobos Ave
San Francisco, CA 94121

Branch Information
Johnson Controls, Inc.
1615 Alvarado St.
San Leandro, CA 94577
Phone: 510-780-7700
Fax: 510-780-7711

CONTRACT NUMBER
9N0K-0074

DRAWING NUMBER
HP-1-7

HP-5 FLOW DIAGRAM

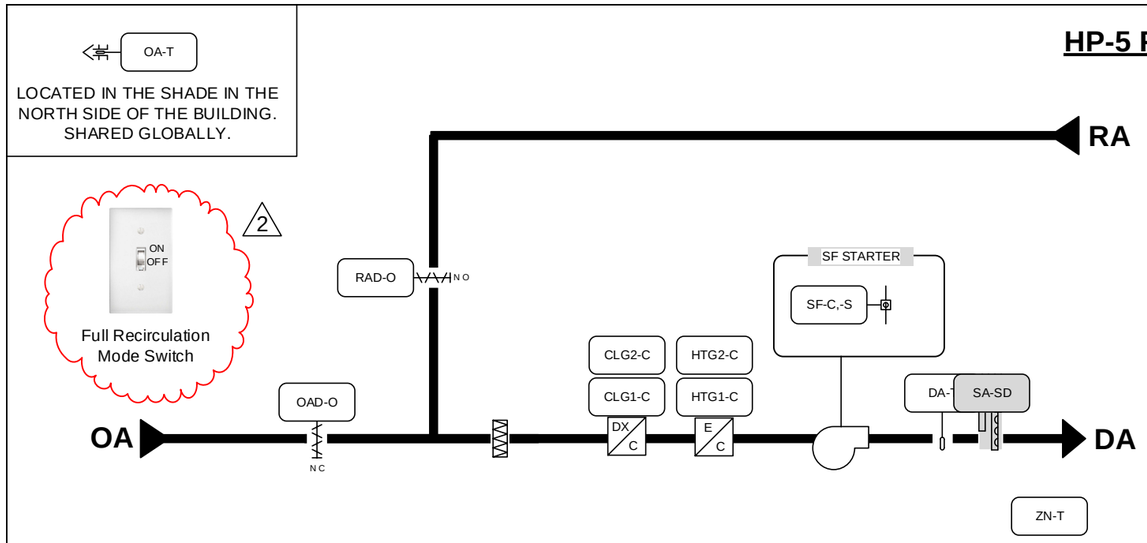

HP SCHEDULE					
TAG	CONDENSING UNIT	LOCATION	SERVING AREA	CAPACITY	SUPPLY FAN CFM
HP-5	CU-5	GROUND FLOOR MECHANICAL ROOM	FIRST FLOOR LOUNGE/ DINING, SECOND FLOOR DINING	20 TON	8050

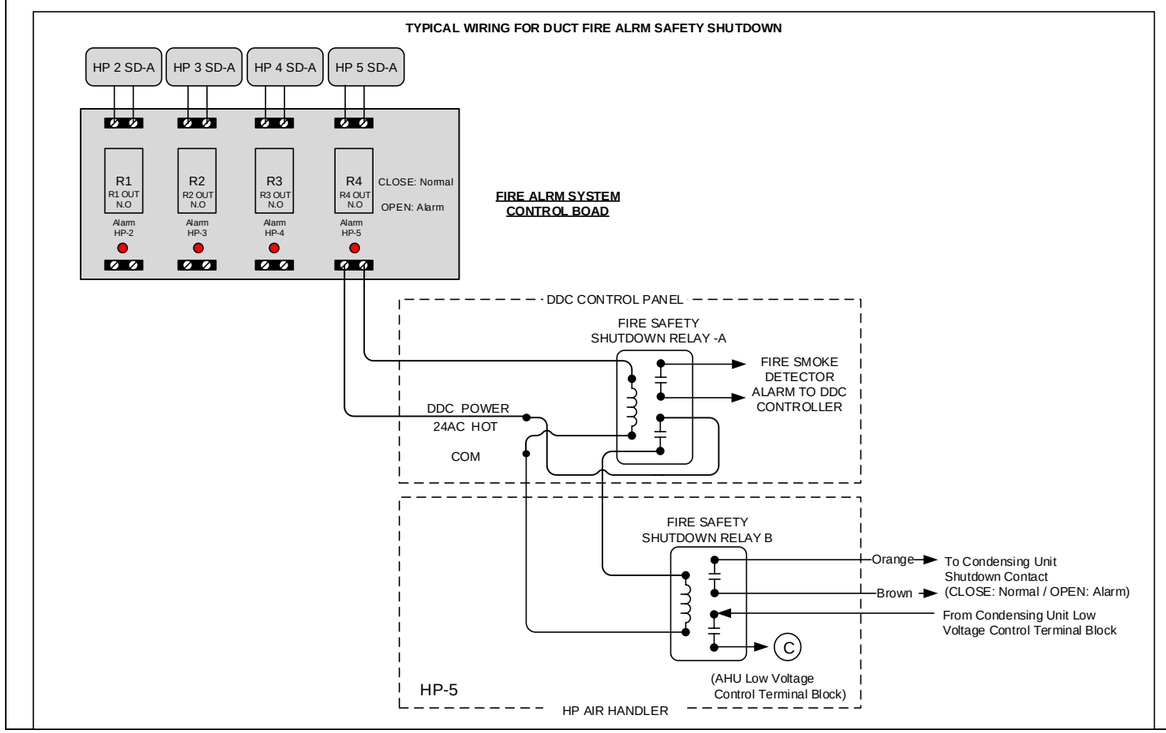

BILL OF MATERIALS

Designation	Qty	Part Number	Description
Field Devices:			
DA-T	1	TE-6311M-1	8" 1000 OHM NI DUCT TEMP
OA-T	1	TE-6313P-1	SENSOR,T-NI,0.1%,3IN OAT
SF-C,-S	1	CSDSC-C50100L1	CURR SW SELF CAL CLMP
ZN-T	1	NS-BTB7003-0	3X4.5.T.F/C.D.AJ.TB ADRS
RAD-O	1	M9310-HGA-2	DAMPER ACTUATORS 10 NM, NSR, 24 VAC/VDC
OAD-O	1	M9310-HGA-2	DAMPER ACTUATORS 10 NM, NSR, 24 VAC/VDC
Rx	7	RH2B-ULAC24V	IDEC DPDT 24VAC RELAY WITH INDICATOR
	7	SH2B-05	IDEC RELAY SOCKET DIN MOUNT
TX-1	1	PAN-PWRSP	PANEL POWER SUPPLY 96VA 120/24VAC

NOTE:

1. GRAY DEVICES ARE PROVIDED WITH UNIT OR PROVIDED BY OTHERS.

2. JCI WILL BE UTILIZING THE EXISTING PANEL TO PLACE THE NEW CONTROLLERS.

3. OAD-O & SF-O WILL MODULATE FOR BALANCING PURPOSE, IT WILL BE FIXED DURING BALANCING BY BALANCING CONTRACTOR.

SEQUENCE OF OPERATION:

SUPPLY FAN CONTROL: THE CONSTANT SPEED SUPPLY FAN (SF-C) WILL BE STARTED BASED ON OCCUPANCY SCHEDULE. WHEN THE SUPPLY FAN STATUS (SF-S) INDICATES THE FAN STARTED, THE CONTROL SEQUENCE WILL BE ENABLED. UPON A LOSS OF AIRFLOW (SF-S), THE SYSTEM WILL ATTEMPT TO AUTOMATICALLY RESTART UNTIL POSITIVE STATUS IS RECEIVED. IF NO AIRFLOW (SF-S) AFTER 3 TIMES AUTOMATIC RESTART, (FAN-RESET) NEED MANFULLY RESET SUPPLY FAN CONTROL AFTER SITE CHECK

2 **FULL RECIRCULATION MODE:** WHEN UPON FULL RECIRCULATION ACTIVATION OF HARDWIRED SWITCH, ALL HEAT PUMP UNITS WILL ENTER FULL RECIRCULATION MODE ,THE OUTSIDE AIR DAMPER WILL BE COMMANDED CLOSED AND RETURN AIR DAMPERS WILL BE COMMANDED FULLY OPEN. WHEN THE HARDWIRED SWITCH IS DEACTIVATED, ALL HEAT PUMP UNITS WILL EXIT FULL RECIRCULATION MODE AND RETURN TO TAB SET POSITIONS FOR MINIMUM OUTSIDE AIRFLOW

HEAT PUMP CONTROL: WHEN THE ZONE TEMPERATURE (ZN-T) FALLS BELOW THE ZONE TEMPERATURE SETPOINT (ZN-SP) THE HEATING STAGE 1 (HTG1-C) WILL BE INDEXED TO PROVIDE HEATING AND STAGE ON TO STAG 2 (HTG2-C) IF NEED MORE HEATING CAPACITY. WHEN THE ZONE TEMPERATURE (ZN-T) RISES ABOVE THE ZONE TEMPERATURE SETPOINT (ZN-SP) AND ECONOMIZER CONTROL IS INACTIVE, THE COOLING STAGE (CLG1-C) WILL BE INDEXED TO PROVIDE COOLING AND STAGE ON TO STAG 2 (CLG2-C) IF NEED MORE COOLING CAPACITY.

OCCUPIED MODE: THE OCCUPANCY MODE WILL BE CONTROLLED VIA A NETWORK INPUT (OCC-SCHEDULE). THE OCCUPANCY MODE CAN ALSO BE OVERRIDDEN BY A NETWORK INPUT (OCC-OVERRIDE).

UNOCCUPIED MODE: THE UNIT WILL REMAIN OFF DURING UNOCCUPIED PERIODS. AFTER HOURS ACTIVATION OF FULL SYSTEM FROM

ANY THERMOSTAT FOR PRESET TIME INTERVAL (1HR ADJ)

REHEAT COIL: THE REHEAT COIL (HTGX-C) WILL BE STAGED IN SEQUENCE TO MAINTAIN THE TEMPERATURE SETPOINT. SUPPLEMENTAL HEATING STAGES WILL BE DISABLED VIA SOFTWARE , IF DA-T REACHES TO 100 DEG F.

UNIT ENABLE: A NETWORK UNIT ENABLE SIGNAL (UNITEN-MODE) WILL CONTROL THE MODE OF THE UNIT

UNIT RESTART AFTER POWER SHUTDOWN:

TO RESTART HEAT PUMP FOLLOWING A SHUTDOWN. THE HEAT PUMP INDOOR AIR HANDLER AND CONDENSING UNIT WILL NEED TO HAVE MAIN POWER CYCLED OFF TO RESET MECHANICAL SYSTEM AT LOCAL DISCONNECTS. THEN, REESTABLISH POWER TO RESUME NORMAL AUTOMATIC CONTROL

ADDITIONAL POINTS MONITORED BY THE FMS:

- OUTDOOR AIR TEMPERATURE (OA-T)
- ZONE TEMPERATURE (ZN-T)
- FULL RECIRCULATION MODE SWTICH

IN CONSIDERATION OF THE RECEIPT OF THIS DOCUMENT, THE RECIPIENT AGREES NOT TO REPRODUCE, COPY, USE OR TRANSMIT THIS DOCUMENT AND/OR THE INFORMATION THEREIN CONTAINED, IN WHOLE OR IN PART, OR TO SUFFER SUCH ACTION BY OTHERS, FOR ANY PURPOSE, EXCEPT WITH THE ADVANCE WRITTEN PERMISSION OF JOHNSON CONTROLS, INC. AND FURTHER AGREES TO SURRENDER SAME TO JOHNSON CONTROLS, INC. UPON DEMAND.

COPYRIGHT JOHNSON CONTROLS, INC. 2019

Drawing Title

HP-5 FLOW DIAGRAM

REFERENCE DRAWING	NO.	REVISION-LOCATION	ECN	DATE	BY
	3	REV.3 (AS-BUILT Drawing)		10/05/2020	JCI
	2	REV.2 (Full Recirculation Mode)		8/25/2020	JCI

Sales Engineer	Project Manager	Application Engineer	DRAWN		APPROVED	
			BY	DATE	BY	DATE
Dan S Levi	David D Thorne	CoEE				

Project Title

Cliff House
1090 Point Lobos Ave
San Francisco, CA 94121

Johnson Controls

Branch Information

Johnson Controls, Inc.
1615 Alvarado St.
San Leandro, CA 94577
Phone: 510-780-7700
Fax: 510-780-7711

CONTRACT NUMBER

9N0K-0074

DRAWING NUMBER

HP-1-8

HP-5 POINT SCHEDULE

Electrician/Fi	Point Information			Controller Information						Panel Information			Intermediate Device				Field Device					
Point Type	System Name	Object Name	Expanded ID	Controller Details	Trunk Type	Trunk Nbr	Trunk Addr.	Cable Destination Bay/Terminal	Termination Out	Panel	Panel Location	Cable Number	Wiring /Tubing	Termination In	Device	Termination Out	Wiring /Tubing	Termination In	Device	Ref Detail Shape	Comment	Template
	HP-5			NCE2560						CP-HP5	GROUND FLOOR MECHANICAL ROOM										Power to Controller	
	HP-5			NCE2560	MS/TP	1	4			CP-HP5	GROUND FLOOR MECHANICAL ROOM										BacNet FC Bus	
UI IN-1	HP-5	DA-T	Discharge Air Temp	NCE2560	MS/TP	1	4	UI IN-1	IN1, ICOM1	CP-HP5	GROUND FLOOR MECHANICAL ROOM	HP5-4-UI IN-1					2/22	2-Wire	TE	F131		
UI IN-2	HP-5	SF-S	Supply Fan Status	NCE2560	MS/TP	1	4	UI IN-2	IN2, ICOM2	CP-HP5	GROUND FLOOR MECHANICAL ROOM	HP5-4-UI IN-2	2/22	OUT, COM	Current Relay	Motor Lead	Motor Lead	See wiring detail	Motor Status (Contact)	F301		
UI IN-3	HP-5	OA-T	Outside Air Temp	NCE2560	MS/TP	1	4	UI IN-3	IN3, ICOM3	CP-HP5	GROUND FLOOR MECHANICAL ROOM	HP5-4-UI IN-3					2/22	2-Wire	TE	F131		
UI IN-4	HP-5	SA-SD	Supply Air Smoke Detector	NCE2560	MS/TP	1	4	UI IN-4	IN4, ICOM4	CP-HP5	GROUND FLOOR MECHANICAL ROOM	HP5-4-UI IN-4	2/22	OUT,COM	Safety Relay	Smoke Detector	2/22	See Wiring Detail	Smoke Detector Alarm (Contact)	F1030		
UI IN-5	HP-5			NCE2560	MS/TP	1	4	UI IN-5		CP-HP5	GROUND FLOOR MECHANICAL ROOM											
UI IN-6	HP-5			NCE2560	MS/TP	1	4	UI IN-6		CP-HP5	GROUND FLOOR MECHANICAL ROOM											
UI IN-7	HP-5			NCE2560	MS/TP	1	4	UI IN-7		CP-HP5	GROUND FLOOR MECHANICAL ROOM											
UI IN-8	HP-5			NCE2560	MS/TP	1	4	UI IN-8		CP-HP5	GROUND FLOOR MECHANICAL ROOM											
UI IN-9	HP-5			NCE2560	MS/TP	1	4	UI IN-9		CP-HP5	GROUND FLOOR MECHANICAL ROOM											
UI IN-10	HP-5			NCE2560	MS/TP	1	4	UI IN-10		CP-HP5	GROUND FLOOR MECHANICAL ROOM											
BI IN-11	HP-5	1 MSF4-S	MECH Supply Fan 4 Status	NCE2560	MS/TP	1	4	BI IN-11	IN11, ICOM11	CP-HP5	GROUND FLOOR MECHANICAL ROOM	HP5-4-BI IN-11	2/22	OUT, COM	Current Relay	Motor Lead	Motor Lead	See wiring detail	Motor Status (Contact)	F301		
BI IN-12	HP-5	1 MSF3-S	MECH Supply Fan 3 Status	NCE2560	MS/TP	1	4	BI IN-12	IN12, ICOM12	CP-HP5	GROUND FLOOR MECHANICAL ROOM	HP5-4-BI IN-12	2/22	OUT, COM	Current Relay	Motor Lead	Motor Lead	See wiring detail	Motor Status (Contact)	F301		
BI IN-13	HP-5	1 MSF2-S	MECH Supply Fan 2 Status	NCE2560	MS/TP	1	4	BI IN-13	IN13, ICOM13	CP-HP5	GROUND FLOOR MECHANICAL ROOM	HP5-4-BI IN-13	2/22	OUT, COM	Current Relay	Motor Lead	Motor Lead	See wiring detail	Motor Status (Contact)	F301		
BI IN-14	HP-5	1 MSF1-S	MECH Supply Fan 1 Status	NCE2560	MS/TP	1	4	BI IN-14	IN14, ICOM14	CP-HP5	GROUND FLOOR MECHANICAL ROOM	HP5-4-BI IN-14	2/22	OUT, COM	Current Relay	Motor Lead	Motor Lead	See wiring detail	Motor Status (Contact)	F301		
BI IN-15	HP-5	2 Full Recirculation Mode Switch	Global Full Recirculation Mode Switch	NCE2560	MS/TP	1	4	BI IN-15	IN15, ICOM15	CP-HP5	GROUND FLOOR MECHANICAL ROOM	HP5-4-BI IN-15					2/22	See wiring detail	Dry Contact	F301		
BI IN-16	HP-5			NCE2560	MS/TP	1	4	BI IN-16		CP-HP5	GROUND FLOOR MECHANICAL ROOM											
BI IN-17	HP-5			NCE2560	MS/TP	1	4	BI IN-17		CP-HP5	GROUND FLOOR MECHANICAL ROOM											
BI IN-18	HP-5			NCE2560	MS/TP	1	4	BI IN-18		CP-HP5	GROUND FLOOR MECHANICAL ROOM											
BO OUT-1	HP-5	SF-C	Supply Fan Command	NCE2560	MS/TP	1	4	BO OUT-1	OUT1, 24V COM	CP-HP5	GROUND FLOOR MECHANICAL ROOM	HP5-4-BO OUT-1	2/22	COIL-,COIL+	Relay	COM, NO	2/14	See wiring detail	Motor (Single Phase)	F1030		
BO OUT-2	HP-5	HTG1-C	Htg Stage 1 Command	NCE2560	MS/TP	1	4	BO OUT-2	OCOM2,OUT2	CP-HP5	GROUND FLOOR MECHANICAL ROOM	HP5-4-BO OUT-2					9/22	R,W1	Heat Pump Thermostat (HTG1)	F1051		
BO OUT-3	HP-5	HTG2-C	Htg Stage 2 Command	NCE2560	MS/TP	1	4	BO OUT-3	OCOM3,OUT3	CP-HP5	GROUND FLOOR MECHANICAL ROOM	HP5-4-BO OUT-3					9/22	R,W2	Heat Pump Thermostat (HTG1)	F1051		
BO OUT-4	HP-5	CLG1-C	Clg Stage 1 Command	NCE2560	MS/TP	1	4	BO OUT-4	OCOM4,OUT4	CP-HP5	GROUND FLOOR MECHANICAL ROOM	HP5-4-BO OUT-4					9/22	R,Y1	Heat Pump Thermostat (COMP1)	F1051		
BO OUT-5	HP-5	CLG2-C	Clg Stage 2 Command	NCE2560	MS/TP	1	4	BO OUT-5	OCOM5,OUT5	CP-HP5	GROUND FLOOR MECHANICAL ROOM	HP5-4-BO OUT-5					9/22	R,Y2	Heat Pump Thermostat (COMP1)	F1051		
BO OUT-6	HP-5			NCE2560	MS/TP	1	4	BO OUT-6		CP-HP5	GROUND FLOOR MECHANICAL ROOM											
BO OUT-7	HP-5			NCE2560	MS/TP	1	4	BO OUT-7		CP-HP5	GROUND FLOOR MECHANICAL ROOM											
CO OUT-8	HP-5	MSF4-C 1	MECH Supply Fan 4 Command	NCE2560	MS/TP	1	4	CO OUT-8	OUT8, 24V COM	CP-HP5	GROUND FLOOR MECHANICAL ROOM	HP5-4-CO OUT-8	2/22	COIL-,COIL+	Relay	COM, NO	2/14	See wiring detail	Motor (Single Phase)	F1030		
CO OUT-9	HP-5	MSF3-C 1	MECH Supply Fan 3 Command	NCE2560	MS/TP	1	4	CO OUT-9	OUT9, 24V COM	CP-HP5	GROUND FLOOR MECHANICAL ROOM	HP5-4-CO OUT-9	2/22	COIL-,COIL+	Relay	COM, NO	2/14	See wiring detail	Motor (Single Phase)	F1030		
CO OUT-10	HP-5	MSF2-C 1	MECH Supply Fan 2 Command	NCE2560	MS/TP	1	4	CO OUT-10	OUT10, 24V COM	CP-HP5	GROUND FLOOR MECHANICAL ROOM	HP5-4-CO OUT-10	2/22	COIL-,COIL+	Relay	COM, NO	2/14	See wiring detail	Motor (Single Phase)	F1030		
CO OUT-11	HP-5	MSF1-C 1	MECH Supply Fan 1 Command	NCE2560	MS/TP	1	4	CO OUT-11	OUT11, 24V COM	CP-HP5	GROUND FLOOR MECHANICAL ROOM	HP5-4-CO OUT-11	2/22	COIL-,COIL+	Relay	COM, NO	2/14	See wiring detail	Motor (Single Phase)	F1030		
AO OUT-12	HP-5	OAD-O	OA Damper Output	NCE2560	MS/TP	1	4	AO OUT-12	OUT8, OCOM8,24VAC ,COM	CP-HP5	GROUND FLOOR MECHANICAL ROOM	HP5-4-CO OUT-12					2/22 / 2/18	3, 1/1, 2	M9310-HGA-2 (Ext Source)	F233		
AO OUT-13	HP-5	RAD-O	RA Damper Output	NCE2560	MS/TP	1	4	AO OUT-13	OUT9, OCOM9,24VAC ,COM	CP-HP5	GROUND FLOOR MECHANICAL ROOM	HP5-4-CO OUT-13					2/22 / 2/18	3, 1/1, 2	M9310-HGA-2 (Ext Source)	F233		
AO OUT-14	HP-5			NCE2560	MS/TP	1	4	AO OUT-14		CP-HP5	GROUND FLOOR MECHANICAL ROOM											
AO OUT-15	HP-5			NCE2560	MS/TP	1	4	AO OUT-15		CP-HP5	GROUND FLOOR MECHANICAL ROOM											
	HP-5			NET STAT						CP-HP5	GROUND FLOOR MECHANICAL ROOM											
	HP-5			NET STAT	SA Bus	1				CP-HP5	GROUND FLOOR MECHANICAL ROOM										BacNet SA Bus	
STAT	HP-5	ZN-T	Zone Temperature	NET STAT	SA Bus	1	200	STAT	+,-,COM,SA PWR	CP-HP5	GROUND FLOOR MECHANICAL ROOM	4-HP5-200-STAT					4/22	+,-,COM,SA PWR	NetSensor (Term,Addressable)	NS102		
STAT	HP-5	MECHROM-ZN-T	Zone Temperature (MECH Room)	NET STAT	SA Bus	1	201	STAT	+,-,COM,SA PWR	CP-HP5	GROUND FLOOR MECHANICAL ROOM	4-HP5-201-STAT					4/22	+,-,COM,SA PWR	NetSensor (Term,Addressable)	NS102		

IN CONSIDERATION OF THE RECEIPT OF THIS DOCUMENT, THE RECIPIENT AGREES NOT TO REPRODUCE, COPY, USE OR TRANSMIT THIS DOCUMENT AND/OR THE INFORMATION THEREIN CONTAINED, IN WHOLE OR IN PART, OR TO SUFFER SUCH ACTION BY OTHERS, FOR ANY PURPOSE, EXCEPT WITH THE ADVANCE WRITTEN PERMISSION OF JOHNSON CONTROLS, INC. AND FURTHER AGREES TO SURRENDER SAME TO JOHNSON CONTROLS, INC. UPON DEMAND.

COPYRIGHT JOHNSON CONTROLS, INC. 2019

Drawing Title

HP-5 POINT SCHEDULE

REFERENCE DRAWING	NO.	REVISION-LOCATION	ECN	DATE	BY
	3	REV.3 (AS-BUILT Drawing)		10/05/2020	JCI
	2	REV.2 (Full Recirculation Mode)		08/25/2020	JCI
	1	REV.1		04/15/2019	JCI

Sales Engineer	Project Manager	Application Engineer	DRAWN BY	DRAWN DATE	APPROVED BY	APPROVED DATE
Dan S Levi	David D Thorne	CoEE				

Project Title

Cliff House
1090 Point Lobos Ave
San Francisco, CA 94121

Johnson Controls

Branch Information
Johnson Controls, Inc.
1615 Alvarado St.
San Leandro, CA 94577
Phone: 510-780-7700
Fax: 510-780-7711

CONTRACT NUMBER
9N0K-0074

DRAWING NUMBER
HP-1-9

DETAIL F131 TEMPERATURE SENSOR INPUT

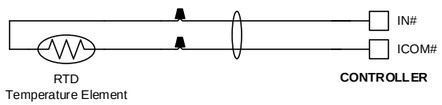

DETAIL F1030 Single Phase Motor Wiring

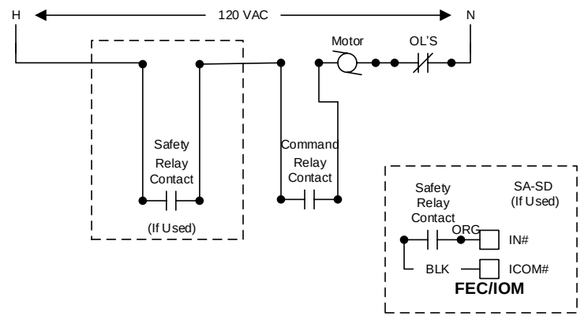

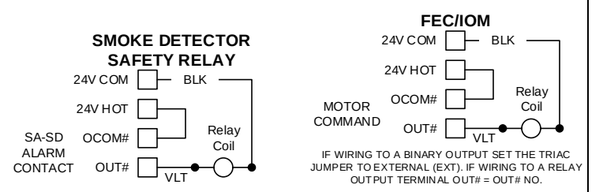

DETAIL F233 0-10VDC OUTPUT to M9310-HGA-2

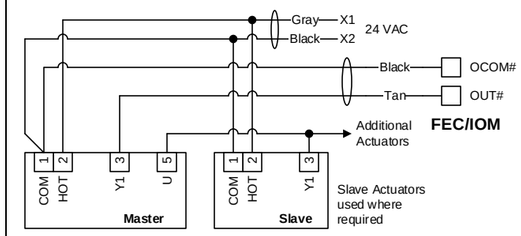

DETAIL F301 BINARY INPUT (DRY CONTACT)

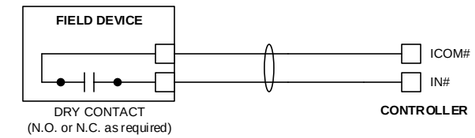

DETAIL F1051 Conventional Thermostat Interface Wiring for Heat Pump

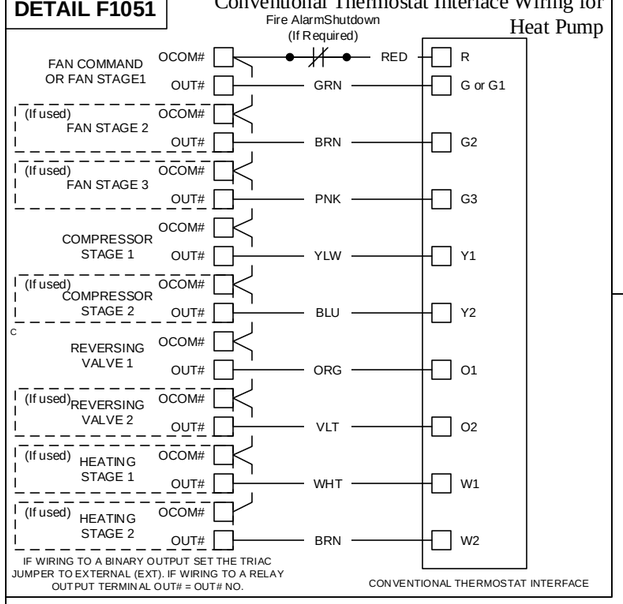

DETAIL NS102 NET STAT WITH TERMINALS ADDRESSABLE

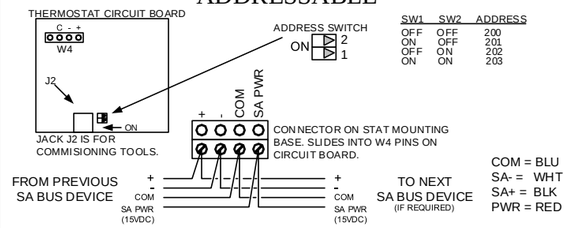

IN CONSIDERATION OF THE RECEIPT OF THIS DOCUMENT, THE RECIPIENT AGREES NOT TO REPRODUCE, COPY, USE OR TRANSMIT THIS DOCUMENT AND/OR THE INFORMATION THEREIN CONTAINED, IN WHOLE OR IN PART, OR TO SUFFER SUCH ACTION BY OTHERS, FOR ANY PURPOSE, EXCEPT WITH THE ADVANCE WRITTEN PERMISSION OF JOHNSON CONTROLS, INC. AND FURTHER AGREES TO SURRENDER SAME TO JOHNSON CONTROLS, INC. UPON DEMAND.

COPYRIGHT JOHNSON CONTROLS, INC. 2019

Drawing Title

HP-5 WIRING DETAILS

REFERENCE DRAWING	NO.	REVISION-LOCATION	ECN	DATE	BY
	3	REV.3 (AS-BUILT Drawing)		07/28/2020	JCI

Sales Engineer	Project Manager	Application Engineer	DRAWN BY	DRAWN DATE	APPROVED BY	APPROVED DATE
Dan S Levi	David D Thorne	CoEE				

Project Title

Cliff House
1090 Point Lobos Ave
San Francisco, CA 94121

Johnson Controls

Branch Information
Johnson Controls, Inc.
1615 Alvarado St.
San Leandro, CA 94577
Phone: 510-780-7700
Fax: 510-780-7711

CONTRACT NUMBER **9N0K-0074**

DRAWING NUMBER **HP-1-10**

HP-5 CONTROLLER WIRING DETAILS

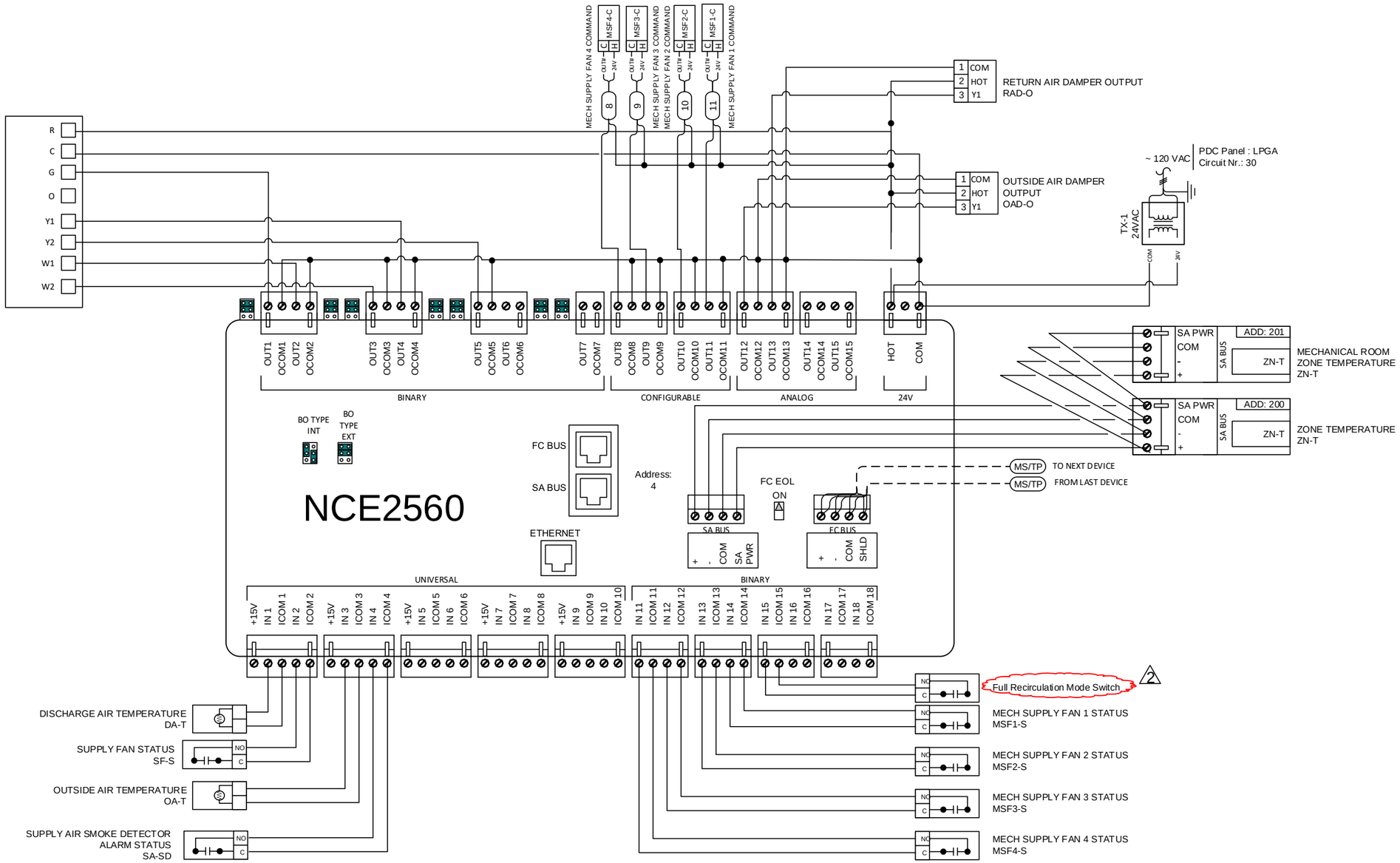

IN CONSIDERATION OF THE RECEIPT OF THIS DOCUMENT, THE RECIPIENT AGREES NOT TO REPRODUCE, COPY, USE OR TRANSMIT THIS DOCUMENT AND/OR THE INFORMATION THEREIN CONTAINED, IN WHOLE OR IN PART, OR TO SUFFER SUCH ACTION BY OTHERS, FOR ANY PURPOSE, EXCEPT WITH THE ADVANCE WRITTEN PERMISSION OF JOHNSON CONTROLS, INC. AND FURTHER AGREES TO SURRENDER SAME TO JOHNSON CONTROLS, INC. UPON DEMAND.

COPYRIGHT JOHNSON CONTROLS, INC. 2019

Drawing Title
HP-5 CONTROLLER WIRING DETAILS

REFERENCE DRAWING	NO.	REVISION-LOCATION	ECN	DATE	BY
	3	REV.3 (AS-BUILT Drawing)		10/05/2020	JCI
	2	REV.2 (Full Recirculation Mode)		08/25/2020	JCI
	1	REV.1		04/15/2019	JCI

Sales Engineer	Project Manager	Application Engineer	DRAWN BY	DRAWN DATE	APPROVED BY	APPROVED DATE
Dan S Levi	David D Thorne	CoEE				

Project Title
Cliff House
1090 Point Lobos Ave
San Francisco, CA 94121

Johnson Controls

Branch Information
Johnson Controls, Inc.
1615 Alvarado St.
San Leandro, CA 94577
Phone: 510-780-7700
Fax: 510-780-7711

CONTRACT NUMBER
9N0K-0074

DRAWING NUMBER
HP-1-11

OA-T

LOCATED IN THE SHADE IN THE NORTH SIDE OF THE BUILDING. SHARED GLOBALLY. MAPPED TO HP-5 SYSTEM

HP-6 FLOW DIAGRAM

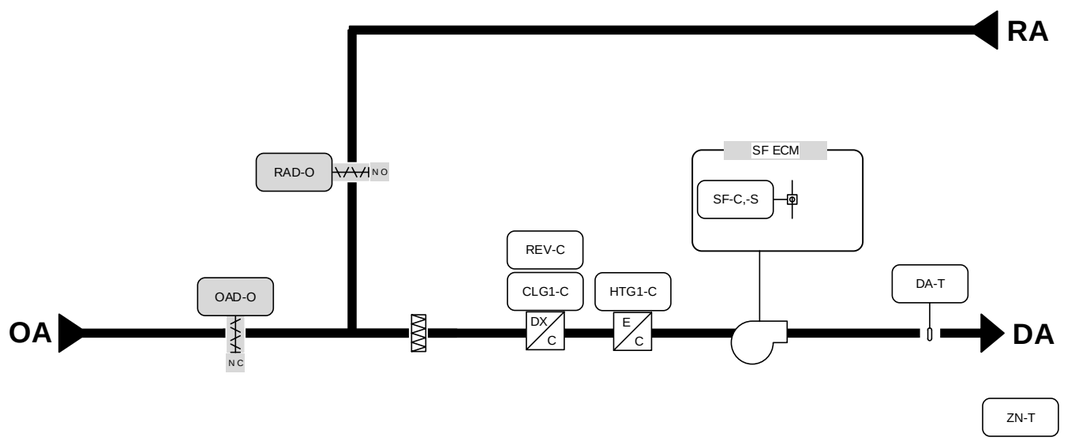

BILL OF MATERIALS

Designation	Qty	Part Number	Description
Field Devices:			
DA-T	1	TE-6311M-1	8" 1000 OHM NI DUCT TEMP
SF-C,-S	1	CSDSC-C50100L1	CURR SW SELF CAL CLMP
ZN-T	1	NS-BTB7003-0	3X4.5.T.F/C.D.AJ.TB ADRS
RELY	4	RH2B-ULAC24V	IDEC DPDT 24VAC RELAY WITH INDICATOR
RELY SOCKET	4	SH2B-05	IDEC RELAY SOCKET DIN MOUNT
Panel Devices:			
CONTROLLER	1	MS-FEC2611-0	FEC2611-0,FEC17

NOTE:

1. GRAY DEVICES ARE PROVIDED WITH UNIT OR PROVIDED BY OTHERS.

2. JCI WILL BE UTILIZING THE EXISTING PANEL TO PLACE THE NEW CONTROLLERS.

3. OAD-O & SF-O WILL MODULATE FOR BALANCING PURPOSE, IT WILL BE FIXED DURING BALANCING BY BALANCING CONTRACTOR.

HP SCHEDULE						
TAG	CONDENSING UNIT	LOCATION	SERVING AREA	CAPACITY	SUPPLY FAN CFM	DAMPER CONTROL
HP-6	CU-6	SECOND FLOOR GIFT SHOP	SECOND FLOOR GIFT SHOP	3 TON	1200	MANUAL

SEQUENCE OF OPERATION:

SUPPLY FAN CONTROL: THE SUPPLY FAN (SF-C) WILL BE STARTED BASED ON OCCUPANCY SCHEDULE (OCC-SCHEDULE). WHEN THE SUPPLY FAN STATUS (SF-S) INDICATES THE FAN STARTED, THE CONTROL SEQUENCE WILL BE ENABLED. UPON A LOSS OF AIRFLOW (SF-S), THE SYSTEM WILL ATTEMPT TO AUTOMATICALLY RESTART UNTIL POSITIVE STATUS IS RECEIVED. IF NO AIRFLOW (SF-S) AFTER 3 TIMES AUTOMATIC RESTART, (FAN-RESET) NEED MANFULLY RESET SUPPLY FAN CONTROL AFTER SITE CHECK

HEAT PUMP CONTROL: WHEN THE ZONE TEMPERATURE (ZN-T) FALLS BELOW THE ZONE TEMPERATURE SETPOINT (ZN-SP) THE REVERSING VALVE (S) (REVX-H) WILL BE INDEXED TO PROVIDE HEATING WHEN THE COMPRESSOR IS RUNNING. WHEN THE ZONE TEMPERATURE (ZN-T) RISES ABOVE THE ZONE TEMPERATURE SETPOINT (ZN-SP) THE REVERSING VALVE (S) (REVX-C) WILL BE INDEXED TO PROVIDE COOLING WHEN THE COMPRESSOR IS RUNNING.

OCCUPIED MODE: THE OCCUPANCY MODE WILL BE CONTROLLED VIA A NETWORK INPUT (OCC-SCHEDULE). THE OCCUPANCY MODE CAN ALSO BE OVERRIDDEN BY A NETWORK INPUT (OCC-OVERRIDE).

UNOCCUPIED MODE: THE UNIT WILL REMAIN OFF DURING UNOCCUPIED PERIODS. AFTER HOURS ACTIVATION OF FULL SYSTEM FROM ANY THERMOSTAT FOR PRESET TIME INTERVAL (1HR ADJ)

REHEAT COIL: THE REHEAT COIL (HTGX-C) WILL BE STAGED IN SEQUENCE TO MAINTAIN THE TEMPERATURE SETPOINT. SUPPLEMENTAL HEATING STAGES WILL BE DISABLED VIA SOFTWARE , IF DA-T REACHES TO 100 DEG F.

UNIT ENABLE: A NETWORK UNIT ENABLE SIGNAL (UNITEN-MODE) WILL CONTROL THE MODE OF THE UNIT

UNIT RESTART AFTER POWER SHUTDOWN:

TO RESTART HEAT PUMP FOLLOWING A SHUTDOWN. THE HEAT PUMP INDOOR AIR HANDLER AND CONDENSING UNIT WILL NEED TO HAVE MAIN POWER CYCLED OFF TO RESET MECHANICAL SYSTEM AT LOCAL DISCONNECTS. THEN, REESTABLISH POWER TO RESUME NORMAL AUTOMATIC CONTROL

ADDITIONAL POINTS MONITORED BY THE FMS:

- OUTDOOR AIR TEMPERATURE (OA-T)
- ZONE TEMPERATURE (ZN-T)

IN CONSIDERATION OF THE RECEIPT OF THIS DOCUMENT, THE RECIPIENT AGREES NOT TO REPRODUCE, COPY, USE OR TRANSMIT THIS DOCUMENT AND/OR THE INFORMATION THEREIN CONTAINED, IN WHOLE OR IN PART, OR TO SUFFER SUCH ACTION BY OTHERS, FOR ANY PURPOSE, EXCEPT WITH THE ADVANCE WRITTEN PERMISSION OF JOHNSON CONTROLS, INC. AND FURTHER AGREES TO SURRENDER SAME TO JOHNSON CONTROLS, INC. UPON DEMAND.

COPYRIGHT JOHNSON CONTROLS, INC. 2019

Drawing Title

HP-6 FLOW DIAGRAM

REFERENCE DRAWING	NO.	REVISION-LOCATION	ECN	DATE	BY
	3	REV.3 (AS-BUILT Drawing)		07/28/2020	JCI
	2	REV.2		05/03/2019	JCI

Sales Engineer	Project Manager	Application Engineer	DRAWN BY	DRAWN DATE	APPROVED BY	APPROVED DATE
Dan S Levi	David D Thorne	CoEE				

Project Title

Cliff House
1090 Point Lobos Ave
San Francisco, CA 94121

Johnson Controls

Branch Information

Johnson Controls, Inc.
1615 Alvarado St.
San Leandro, CA 94577
Phone: 510-780-7700
Fax: 510-780-7711

CONTRACT NUMBER **9N0K-0074**

DRAWING NUMBER **HP-1-12**

Electrician/Fi	Point Information			Controller Information						Panel Information			Intermediate Device				Field Device				
Point Type	System Name	Object Name	Expanded ID	Controller Details	Trunk Type	Trunk Nbr	Trunk Addr.	Cable Destination Bay/Terminal	Termination Out	Panel	Panel Location	Cable Number	Wiring /Tubing	Termination In	Device	Termination Out	Wiring /Tubing	Termination In	Device	Ref Detail Shape	Comment
	HP-6			FEC 2611						CP-HP6	SECOND FLOOR GIFT SHOP										Power to Controller
	HP-6			FEC 2611	MS/TP	1	12			CP-HP6	SECOND FLOOR GIFT SHOP										BacNet FC Bus
UI IN-1	HP-6	DA-T	Discharge Air Temp	FEC 2611	MS/TP	1	12	UI IN-1	IN1, ICOM1	CP-HP6	SECOND FLOOR GIFT SHOP	HP-6-12-UI IN-1					2/22	2-Wire	TE	F131	
UI IN-2	HP-6			FEC 2611	MS/TP	1	12	UI IN-2		CP-HP6	SECOND FLOOR GIFT SHOP										
UI IN-3	HP-6			FEC 2611	MS/TP	1	12	UI IN-3		CP-HP6	SECOND FLOOR GIFT SHOP										
UI IN-4	HP-6			FEC 2611	MS/TP	1	12	UI IN-4		CP-HP6	SECOND FLOOR GIFT SHOP										
UI IN-5	HP-6			FEC 2611	MS/TP	1	12	UI IN-5		CP-HP6	SECOND FLOOR GIFT SHOP										
UI IN-6	HP-6			FEC 2611	MS/TP	1	12	UI IN-6		CP-HP6	SECOND FLOOR GIFT SHOP										
BI IN-7	HP-6			FEC 2611	MS/TP	1	12	BI IN-7		CP-HP6	SECOND FLOOR GIFT SHOP										
BI IN-8	HP-6	SF-S	Supply Fan Status	FEC 2611	MS/TP	1	12	BI IN-8		CP-HP6	SECOND FLOOR GIFT SHOP		2/22	OUT, COM	Current Relay	Motor Lead	Motor Lead	See wiring detail	Motor Status (Contact)	F301	
BO OUT-1	HP-6	SF-C	Supply Fan Command	FEC 2611	MS/TP	1	12	BO OUT-1	OUT1, 24V COM	CP-HP6	SECOND FLOOR GIFT SHOP	HP-6-12-BO OUT-1	2/22	COIL-,COIL+	Relay	COM, NO	2/14	See wiring detail	Motor (Single Phase)	F1030	
BO OUT-2	HP-6	HTG1-C	Htg Stage 1 Command	FEC 2611	MS/TP	1	12	BO OUT-2	OCOM2,OUT2	CP-HP6	SECOND FLOOR GIFT SHOP	HP-6-12-BO OUT-2					9/22	R,W1	Heat Pump Thermostat (HTG1)	F1051	
BO OUT-3	HP-6	CLG1-C	Clg Stage 1 Command	FEC 2611	MS/TP	1	12	BO OUT-3	OCOM3,OUT3	CP-HP6	SECOND FLOOR GIFT SHOP	HP-6-12-BO OUT-3					9/22	R,Y1	Heat Pump Thermostat (COMP1)	F1051	
CO OUT-4	HP-6	REV-C	Reversing Valve Command	FEC 2611	MS/TP	1	12	CO OUT-4	OCOM6,OUT6	CP-HP6	SECOND FLOOR GIFT SHOP	HP-6-12-CO OUT-4					9/22	R,O1	Heat Pump Thermostat (REV VLV1)	F1051	
CO OUT-5	HP-6			FEC 2611	MS/TP	1	12	CO OUT-5		CP-HP6	SECOND FLOOR GIFT SHOP										
CO OUT-6	HP-6			FEC 2611	MS/TP	1	12	CO OUT-6		CP-HP6	SECOND FLOOR GIFT SHOP										
CO OUT-7	HP-6			FEC 2611	MS/TP	1	12	CO OUT-7		CP-HP6	SECOND FLOOR GIFT SHOP										
AO OUT-8	HP-6			FEC 2611	MS/TP	1	12	AO OUT-8		CP-HP6	SECOND FLOOR GIFT SHOP										
AO OUT-9	HP-6			FEC 2611	MS/TP	1	12	AO OUT-9		CP-HP6	SECOND FLOOR GIFT SHOP										
	HP-6			NET STAT						CP-HP6	SECOND FLOOR GIFT SHOP										
	HP-6			NET STAT	SA Bus	1	200			CP-HP6	SECOND FLOOR GIFT SHOP										BacNet SA Bus
STAT	HP-6	ZN-T	Zone Temperature	NET STAT	SA Bus	1	200	STAT	+,-,COM,SA PWR	CP-HP6	SECOND FLOOR GIFT SHOP	12-HP6-200-STAT					4/22	+,-,COM,SA PWR	NetSensor (Term,Addressable)	NS102	

DETAIL F131 — TEMPERATURE SENSOR INPUT

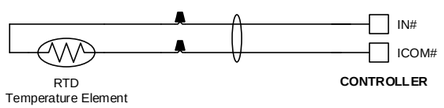

DETAIL F201 — ANALOG OUTPUT (VOLTAGE)

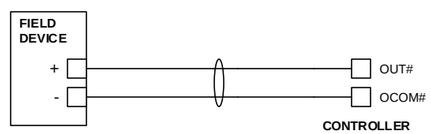

DETAIL F233 — 0-10VDC OUTPUT to M9310-HGA-2

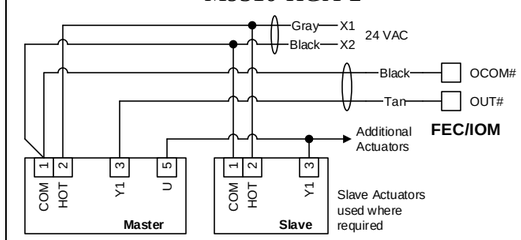

DETAIL F301 — BINARY INPUT (DRY CONTACT)

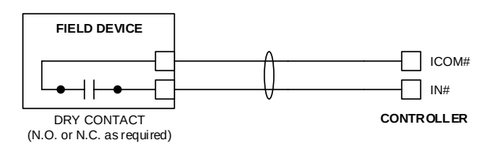

DETAIL F1051 — Conventional Thermostat Interface Wiring for Heat Pump

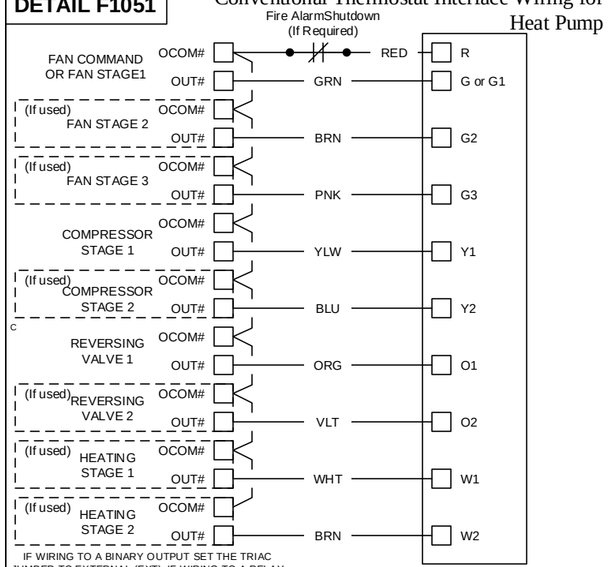

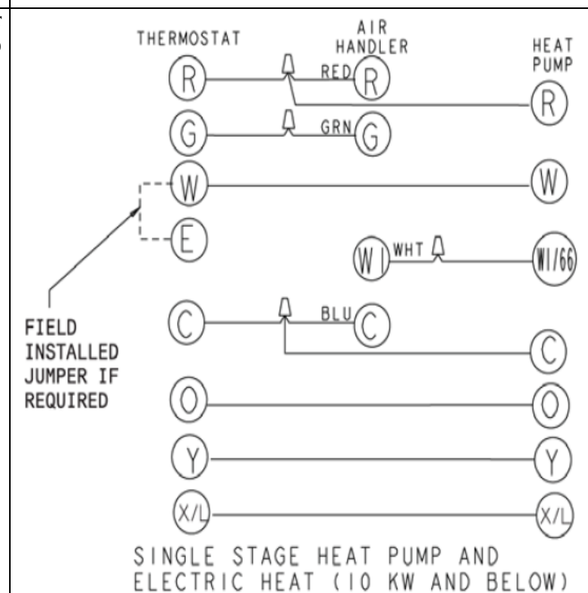

DETAIL F1030 — Single Phase Motor Wiring

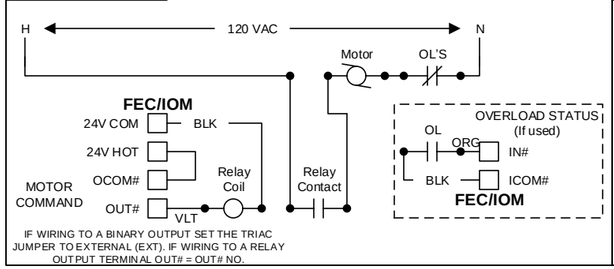

DETAIL NS102 — NET STAT WITH TERMINALS ADDRESSABLE

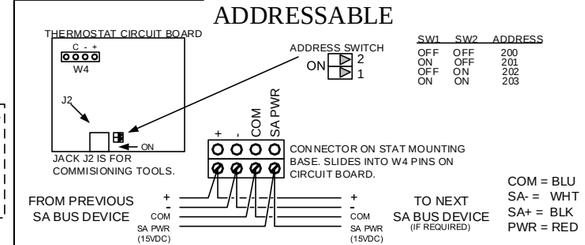

IN CONSIDERATION OF THE RECEIPT OF THIS DOCUMENT, THE RECIPIENT AGREES NOT TO REPRODUCE, COPY, USE OR TRANSMIT THIS DOCUMENT AND/OR THE INFORMATION THEREIN CONTAINED, IN WHOLE OR IN PART, OR TO SUFFER SUCH ACTION BY OTHERS, FOR ANY PURPOSE, EXCEPT WITH THE ADVANCE WRITTEN PERMISSION OF JOHNSON CONTROLS, INC. AND FURTHER AGREES TO SURRENDER SAME TO JOHNSON CONTROLS, INC. UPON DEMAND.

COPYRIGHT JOHNSON CONTROLS, INC. 2019

Drawing Title
HP-6 POINT SCHEDULE & WIRING DETAILS

REFERENCE DRAWING	NO.	REVISION-LOCATION	ECN	DATE	BY
	3	REV.3 (AS-BUILT Drawing)		07/28/2020	JCI

Sales Engineer	Project Manager	Application Engineer	DRAWN BY	DRAWN DATE	APPROVED BY	APPROVED DATE
Dan S Levi	David D Thorne	CoEE				

Project Title
Cliff House
1090 Point Lobos Ave
San Francisco, CA 94121

Johnson Controls

Branch Information
Johnson Controls, Inc.
1615 Alvarado St.
San Leandro, CA 94577
Phone: 510-780-7700
Fax: 510-780-7711

CONTRACT NUMBER
9N0K-0074

DRAWING NUMBER
HP-1-13

HP-6 CONTROLLER WIRING DETAILS

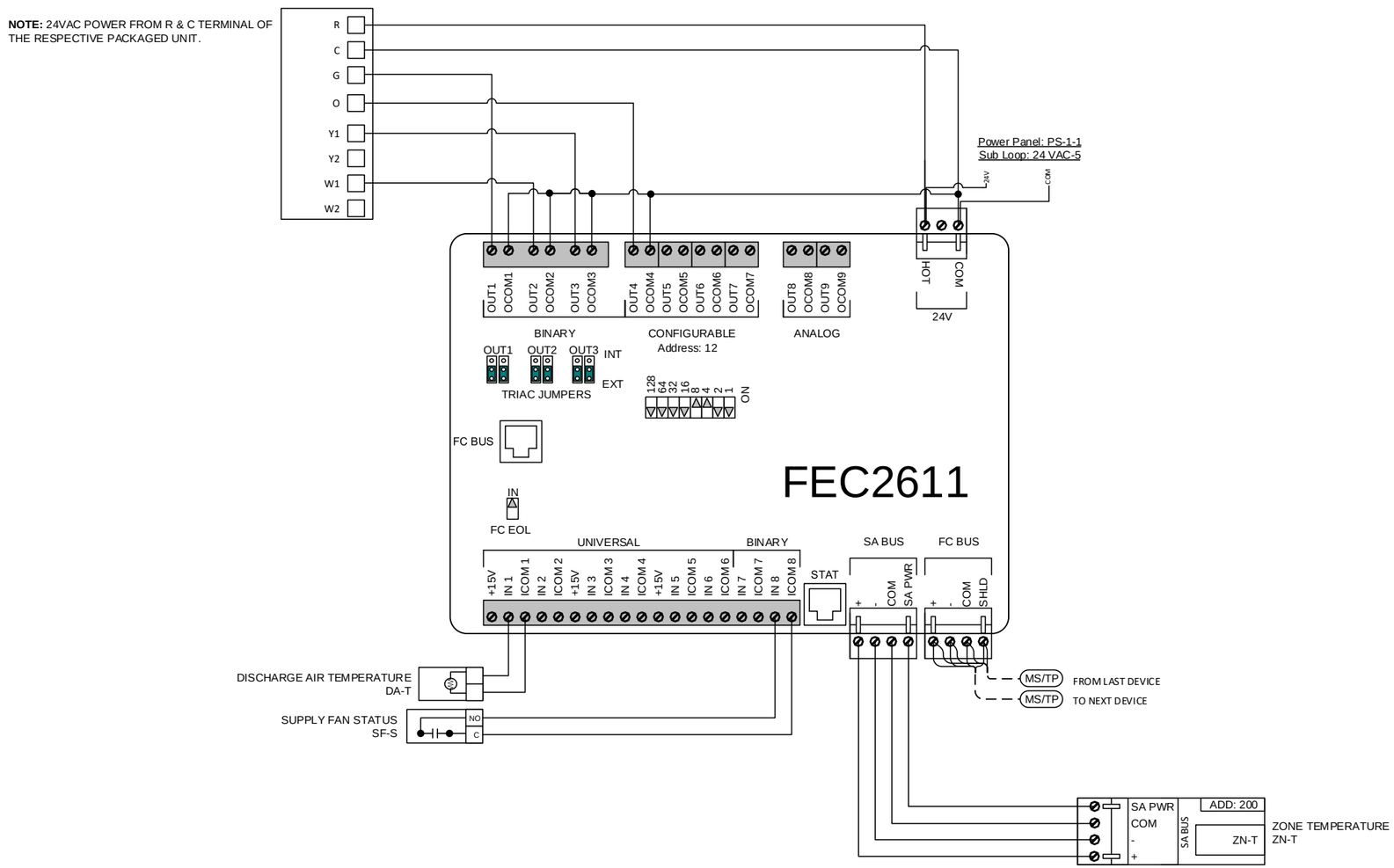

IN CONSIDERATION OF THE RECEIPT OF THIS DOCUMENT, THE RECIPIENT AGREES NOT TO REPRODUCE, COPY, USE OR TRANSMIT THIS DOCUMENT AND/OR THE INFORMATION THEREIN CONTAINED, IN WHOLE OR IN PART, OR TO SUFFER SUCH ACTION BY OTHERS, FOR ANY PURPOSE, EXCEPT WITH THE ADVANCE WRITTEN PERMISSION OF JOHNSON CONTROLS, INC. AND FURTHER AGREES TO SURRENDER SAME TO JOHNSON CONTROLS, INC. UPON DEMAND.

COPYRIGHT JOHNSON CONTROLS, INC. 2019

Drawing Title
HP-6 CONTROLLER WIRING DETAILS

REFERENCE DRAWING	NO.	REVISION-LOCATION	ECN	DATE	BY
	3	REV.3 (AS-BUILT Drawing)		07/28/2020	JCI

Sales Engineer	Project Manager	Application Engineer	DRAWN BY	DRAWN DATE	APPROVED BY	APPROVED DATE
Dan S Levi	David D Thorne	CoEE				

Project Title
Cliff House
1090 Point Lobos Ave
San Francisco, CA 94121

Branch Information
Johnson Controls, Inc.
1615 Alvarado St.
San Leandro, CA 94577
Phone: 510-780-7700
Fax: 510-780-7711

CONTRACT NUMBER
9N0K-0074

DRAWING NUMBER
HP-1-14

MSF FLOW DIAGRAM
(TYPICAL 4)

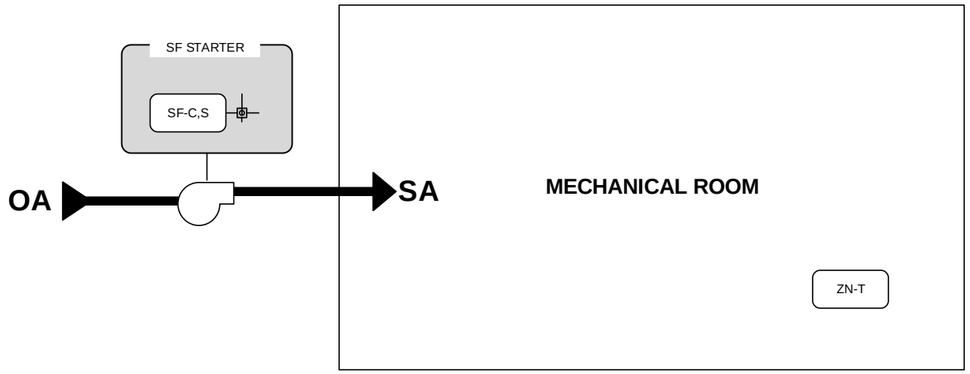

BILL OF MATERIALS

Designation	Qty	Part Number	Description
Field Devices:			
MSFx-C,S	4	CSDSC-C45050L1	CURR SW SELF CAL CLMP
ZN-T	1	NS-BTB7003-0	3X4.5.T.F/C.D.AJ.TB ADRS

NOTE:

1. GRAY DEVICES ARE PROVIDED WITH UNIT OR PROVIDED BY OTHERS.

2. MSF POINTS ARE MAPPED TO HP-5 UNIT CONTROLLER, REFER HP-1-9 THRU HP-1-11 SUBMITTAL PAGES.TOR.

ADDITIONAL NOTES
1. DEMO EXISTING ERODED BMS TCP LOCATED AT ENTRANCE OF MECHANICAL ROOM.
3. INSTALL NEW WIRING TO NEW ZONE THERMOSTATS OR ZATS.
4. REMOVE AND REINSTALL EXISTING UNIT DAMPER ACTUATORS ONTO NEW DAMPER SECTIONS.
5. REUSE THE EXISTING BMS 24V POWER.
6. INSTALL WIRING IN THE CU MECHANICAL ROOM IN PLENUM CABLE AS EXISTING.
7. WIRING WITHIN MAIN MECHANICAL ROOM TO BE IN CONDUIT BELOW 8'-0" AFF. PLENUM OVER HEAD AS NEEDED.

MECH SF SCHEDULE

TAG	LOCATION	SERVING AREA	PANEL DETAILS
MSF1	MECHANICAL ROOM	MECHANICAL ROOM	CP-HP5
MSF2	MECHANICAL ROOM	MECHANICAL ROOM	CP-HP5
MSF3	MECHANICAL ROOM	MECHANICAL ROOM	CP-HP5
MSF4	MECHANICAL ROOM	MECHANICAL ROOM	CP-HP5

SEQUENCE OF OPERATION

MECHRM-SYS-EN WILL ENABLE ALL FANS CAN OPERATION. BASED ON OCCUPIED SCHEDULE (MECHRM-OCC-SCH) , MSF-1 & MSF-4 FAN WILL OPERATE. AND, MECHRM-OCC-OVR ALSO CAN OVERIDE OCCUPIED MODE TO TURN ON FANS.

MSF-3 AND MSF-2 WILL ADD TO OPERATE WHEN THE ZONE TEMPERATURE ABOVE ROOM TEMPERATURE SETPOINT 72 ^{O}F(ADJ.). WHEN THE ZONE TEMPERATURE BELOW ROOM TEMPERATURE SETPOINT 72 ^{O}F(ADJ.), ONLY MSF-1 & MSF-4 FAN KEEP OPERATE

IN CONSIDERATION OF THE RECEIPT OF THIS DOCUMENT, THE RECIPIENT AGREES NOT TO REPRODUCE, COPY, USE OR TRANSMIT THIS DOCUMENT AND/OR THE INFORMATION THEREIN CONTAINED, IN WHOLE OR IN PART, OR TO SUFFER SUCH ACTION BY OTHERS, FOR ANY PURPOSE, EXCEPT WITH THE ADVANCE WRITTEN PERMISSION OF JOHNSON CONTROLS, INC. AND FURTHER AGREES TO SURRENDER SAME TO JOHNSON CONTROLS, INC. UPON DEMAND.

COPYRIGHT JOHNSON CONTROLS, INC. 2019

Drawing Title
MSF FLOW DIAGRAM

REFERENCE DRAWING	NO.	REVISION-LOCATION	ECN	DATE	BY
	3	REV.3 (AS-BUILT Drawing)		07/28/2020	JCI
	1	REV.1		04/15/2019	JCI

Sales Engineer	Project Manager	Application Engineer	DRAWN BY	DRAWN DATE	APPROVED BY	APPROVED DATE
Dan S Levi	David D Thorne	CoEE				

Project Title
Cliff House
1090 Point Lobos Ave
San Francisco, CA 94121

Branch Information
Johnson Controls, Inc.
1615 Alvarado St.
San Leandro, CA 94577
Phone: 510-780-7700
Fax: 510-780-7711

CONTRACT NUMBER
9N0K-0074

DRAWING NUMBER
MSF-1-1

POWER SCHEDULE

BILL OF MATERIAL

DESIGNATION	QTY.	CODE NUMBER.	DESCRIPTION
PS-1-1	1	PSH500A-LVC	ENCL 500VA PS W/5 100VA

POWER DISTRIBUTION SCHEDULE				
PSH500A (PS-1-1)				
24 VAC-1	24 VAC-2	24 VAC-3	24 VAC-4	24 VAC-5
CP HP-1	CP HP-3	CP HP-4	Reserved	CP HP-6
CP HP-2				

POWER PANEL – PSH500A

PS-1-1

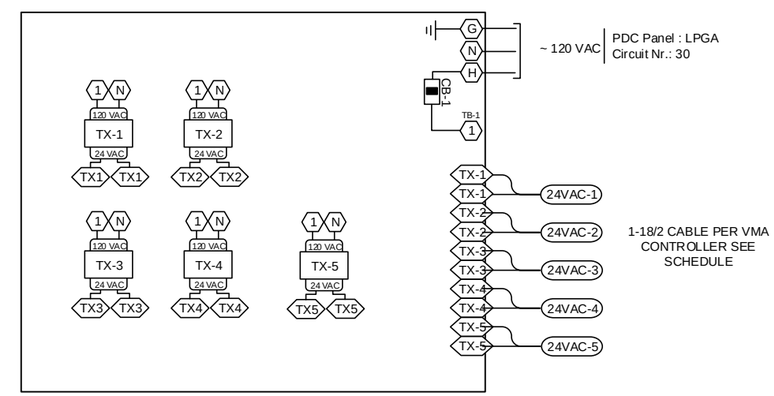

Dimensions:
12.125″ x 12.125″ x 6.000″

IN CONSIDERATION OF THE RECEIPT OF THIS DOCUMENT, THE RECIPIENT AGREES NOT TO REPRODUCE, COPY, USE OR TRANSMIT THIS DOCUMENT AND/OR THE INFORMATION THEREIN CONTAINED, IN WHOLE OR IN PART, OR TO SUFFER SUCH ACTION BY OTHERS, FOR ANY PURPOSE, EXCEPT WITH THE ADVANCE WRITTEN PERMISSION OF JOHNSON CONTROLS, INC. AND FURTHER AGREES TO SURRENDER SAME TO JOHNSON CONTROLS, INC. UPON DEMAND.

COPYRIGHT JOHNSON CONTROLS, INC. 2013

Drawing Title

POWER SCHEUDLE

REFERENCE DRAWING	NO.	REVISION-LOCATION	ECN	DATE	BY
	3	REV.3 (AS-BUILT Drawing)		07/28/2020	JCI

Sales Engineer	Project Manager	Application Engineer	DRAWN BY	DRAWN DATE	APPROVED BY	APPROVED DATE
Dan S Levi	David D Thorne	CoEE				

Project Title

GV & CAP G TENANT IMPROVEMENT
BMS SYSTEM
ONE FERRY BUILDING, SUITE 250
SAN FRANCISCO, CA 94111

Johnson Controls

Branch Information
Johnson Controls, Inc.
1615 Alvarado St.
San Leandro, CA 94577
Phone: 510-780-7700
Fax: 510-780-7711

CONTRACT NUMBER
9N0K-0074

DRAWING NUMBER
PS-1-1

THE CLIFF HOUSE

TENANT IMPROVEMENT

1090 POINT LOBOS AVE,
SAN FRANCISCO, CALIFORNIA 94121

THERMA
1601 Las Plumas Ave
San Jose, CA. 95133-1613
(408) 347-3400
St Cont Lic 1027316

This drawing is and shall remain the PROPERTY OF THERMA CORPORATION whether the PROJECT for which it was made is EXECUTED or NOT. It is to be used THERMA CORPORATION PERSONNEL ONLY and is NOT to be used by anyone else for any purpose except by prior AGREEMENT IN WRITING WITH THERMA CORPORATION

THERMA TEAM

PROJECT MANAGEMENT:
JOEL SAKAMOTO
OFFICE: (408) 347-3400
CELL: (408) 239-6576
EMAIL:jsakamoto@therma.com
ENGINEERING:
MEHRDAD ALIPOUR
OFFICE: (408) 347-3400
CELL: (408) 690-0905
EMAIL:malipour@therma.com

PROJ. INFORMATION

BUILDING: EXISTING BUILDING
ADDRESS: 1090 POINT LOBOS AVE, SAN FRANCISCO, CALIFORNIA 94121

NUMBER OF FLOORS: 2 FLOOR

TOTAL FLOOR AREA: 17,000 SQ. FT.

AREA OF WORK: 2,250 SQ.FT.

KEY PLAN

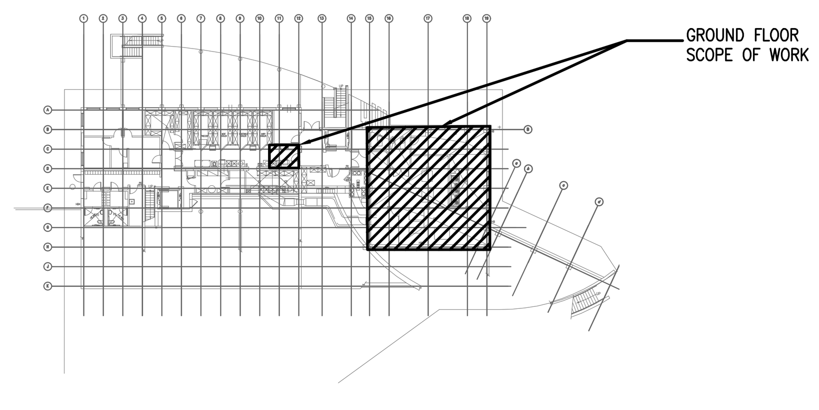

GROUND FLOOR PLAN

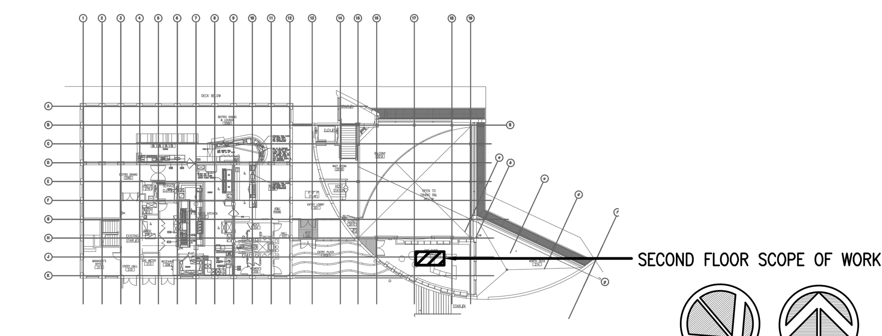

SECOND FLOOR PLAN

REF. TRUE

MAP KEY

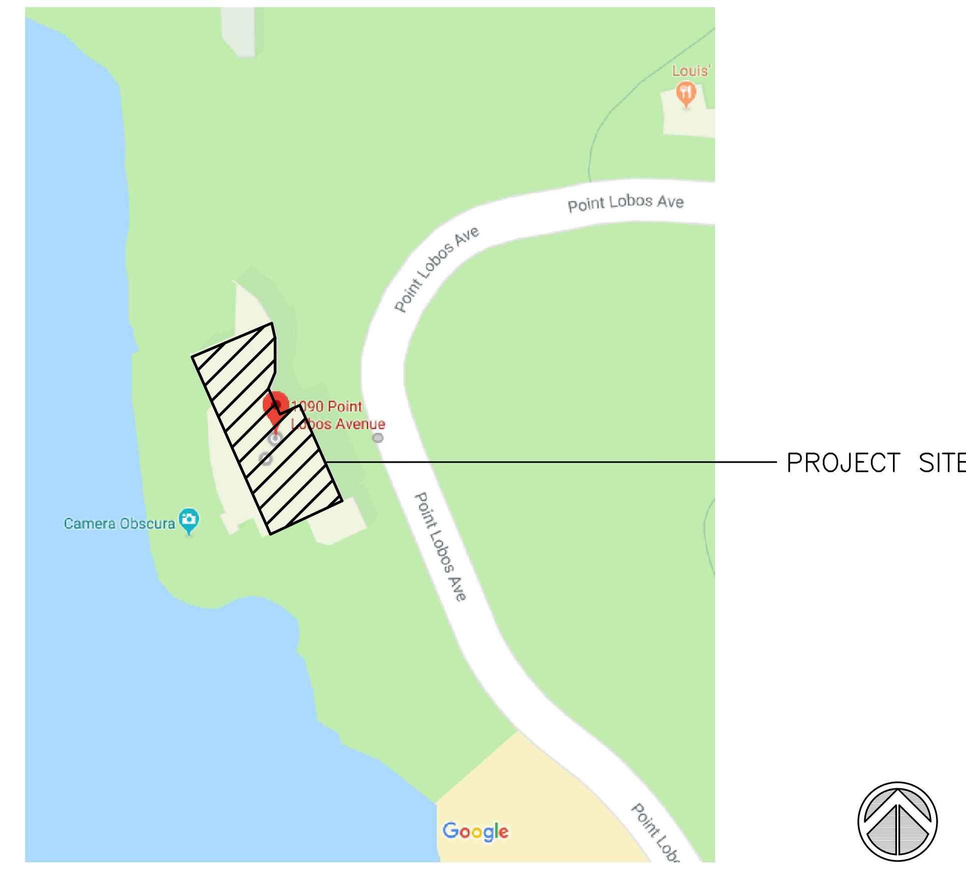

TRUE

DRAWING INDEX

DWG	DRAWING	DRAWING SET ISSUE #										
##	DESCRIPTION	0	1	2	3	4	5	6	7	8	9	10
MECHANICAL												
M0.1	MECHANICAL COVER SHEET	N	N	N	R	-	-	-	-	-	-	-
M0.2	MECHANICAL TITLE 24	N	N	N	N	-	-	-	-	-	-	-
M0.3	MECHANICAL SCHEDULES	N	N	N	R	-	-	-	-	-	-	-
MD2.0.1	MECHANICAL DEMO PARTIAL GROUND FLOOR PLAN	N	N	N	N	-	-	-	-	-	-	-
M2.0.0	MECHANICAL OVERALL GROUND FLOOR PLAN	-	-	-	R	-	-	-	-	-	-	-
M2.0.1	MECHANICAL PARTIAL GROUND FLOOR PLAN	N	N	N	R	-	-	-	-	-	-	-
M2.1.0	MECHANICAL OVERALL FIRST FLOOR PLAN	-	-	-	R							
MD2.2.1	MECHANICAL DEMO PARTIAL SECOND FLOOR PLAN	N	N	N	N	-	-	-	-	-	-	-
M2.2.0	MECHANICALOVERALL SECOND FLOOR PLAN	-	-	-	R	-	-	-	-	-	-	-
M2.2.1	MECHANICAL PARTIAL SECOND FLOOR PLAN	N	N	N	R	-	-	-	-	-	-	-
M3.1	MECHANICAL DETAILS	N	N	N	R	-	-	-	-	-	-	-
PLUMBING												
P2.0.1	PLUMBING PARTIAL GROUND FLOOR PLAN	N	N	N	N	-	-	-	-	-	-	-
P2.2.1	PLUMBING PARTIAL SECOND FLOOR PLAN	N	N	N	N	-	-	-	-	-	-	-

LEGEND:

DD	DESIGN DOCUMENTS. DRAWINGS ARE PRELIMINARY, REVISIONS ARE NOT CLOUDED
-	DRAWING IS NOT INCLUDED IN THIS SET
R	DRAWING INCLUDED IN THIS SET, DRAWING HAS BEEN CHANGED FOR THIS ISSUE
N	DRAWING INCLUDED IN THIS SET, DRAWING HAS NOT BEEN CHANGED FOR THIS ISSUE

LEGENDS, SYMBOLS, & ABBREVIATIONS

ROUND DUCT SYMBOL LEGEND

SYMBOL	DESCRIPTION
	DUCT OR FLUE THRU ROOF OR FLOOR
X	ROUND SUPPLY DUCT
X SS	ROUND STAINLESS STEEL SUPPLY DUCT
X SP	ROUND SPIRAL SUPPLY DUCT
X X	REDUCER
X X	90 °ELBOW, ROUND DUCT <FLEX>
X X	45 °ELBOW, ROUND DUCT <FLEX>
X X	45 °ELBOW, ROUND DUCT <FLEX>
X X X	WYE BRANCH, ROUND TO ROUND <FLEX>
X X X X	DOUBLE WYE BRANCH, ROUND TO ROUND <FLEX>
X X	SADDLE-TAP ROUND TO ROUND <FLEX>
X X X X	CONICAL SADDLE-TAP ROUND TO ROUND <FLEX>
X X	TAP ROUND TO ROUND WITH DAMPER <SPIN-IN> <FLEX>

MECHANICAL SYMBOL & LEGEND

SYMBOL	ABBREV.	DESCRIPTION
	VD	VOLUME DAMPER – MANUAL
M		VOLUME DAMPER – MOTORIZED
BDD	BDD	BACKDRAFT DAMPER
FSD XXX	FSD	FIRE/SMOKE DAMPER
T XXX		THERMOSTAT
H XXX		HUMIDISTAT
P		PRESSURE SENSOR
XXX CFM		SUPPLY AIR DIFFUSER 24x24" – COOLING ONLY
XXX CFM		RETURN AIR DIFFUSER 24x24"
XXX EXH		EXHAUST AIR DIFFUSER 24x24"
X XXX HEPA		48x24" HEPA FILTER
XXX CFM 2'-3 SLOT		SUPPLY AIR SLOT DIFFUSER
XXX CFM 4'-2 SLOT		SUPPLY AIR SLOT DIFFUSER
X X XXX RA		RETURN AIR GRILLE 48x24" WITH NECK SIZE SPECIFIED
XXX SA		SUPPLY AIR SIDEWALL DIFFUSER
XxX" AD		ACCESS DOOR – SIZE INDICATED
VAV XXX		VAV BOX – COOLING ONLY
VAV XXX		VAV BOX WITH REHEAT COIL
X X VAV XXX		DOUBLE DUCT VAV BOX WITH COOLING & HEATING
POC	POC	POINT OF CONNECTION
POD	POD	POINT OF DISCONNECTION
		DIRECTIONAL FLOW
	<E>	EXISTING EQUIPMENT/COMPONENTS
	<F>	FUTURE EQUIPMENT/COMPONENTS
	<R>	RELOCATED EQUIPMENT/COMPONENTS

PIPING LEGEND

SYMBOL	DESCRIPTION
	POINT OF CONNECTION
	POINT OF DISCONNECTION
	UNION
	FLANGE
	PIPE CAP
	LINE CONTINUES
	LINE SIZE REDUCER
	RISE OR DROP
	LINE DOWN
	LINE UP
	BRANCH (BOTTOM CONNECTION)
	BRANCH (TOP CONNECTION)
	BRANCH (SIDE CONNECTION)
	NEW PIPE LINE (DARK)
	EXISTING PIPE LINE (LIGHT)
	DIRECTION OF FLOW
	BALL VALVE
	BUTTERFLY VALVE
	CHECK VALVE
	CIRCUIT SETTER
	DIAPHRAGM VALVE
	GATE VALVE
	GLOBE VALVE
	NEEDLE VALVE
	3-WAY AUTOMATIC VALVE
	CONTROL VALVE
	PRESSURE REGULATOR
	PNEUMATIC MOTOR VALVE
	ELECTRIC MOTOR ACTUATOR
P	PRESSURE GAUGE
TS	TEMPERATURE SENSOR
	THERMOMETER
PP	PETE'S PLUG
	FLEX CONNECTION

ANNOTATION ABBREVIATIONS

ABBREV	DESCRIPTION	ABBREV	DESCRIPTION
ABS	ABSORBTION	MATL	MATERIAL
ACFM	ACTUAL CUBIC FEET PER MINUTE	MAX	MAXIMUM
AFF	ABOVE FINISHED FLOOR	MBH	THOUSAND BTU PER HOUR
AMB	AMBIENT	MCA	MINIMUM CIRCUIT AMPACITY
APD	AIR PRESSURE DROP	MECH	MECHANICAL
AWB	AMBIENT WET BULB	MFR	MANUFACTURER
BHP	BRAKE HORSE POWER	MFS	MAXIMUM FUSE SIZE
BLDG	BUILDING	MIN.	MINIMUM
BOD	BOTTOM OF DUCT	MOCP/MOP	MAXIMUM OVERCURRENT PROTECTION
BOP	BOTTOM OF PIPE	MS	MOTOR STARTER
BTUH	BRITISH THERMAL UNIT PER HOUR	MTD/MTG	MOUNTED/MOUNTING
CAP	CAPACITY	<N>	NEW
CFM	CUBIC FEET PER MINUTE	N/A	NOT APPLICABLE
CLG	COOLING, OR CEILING	NC	NORMALLY CLOSED
COL	COLUMN	NIC	NOT IN CONTRACT
CONC	CONCRETE	NIS	NOT IN SCOPE
CONN	CONNECTION	NO	NORMALLY OPEN/NUMBER
CRT	CIRCUIT(S)	NOM	NOMINAL
CS	CURRENT SWITCH	NPLV	NON-STANDARD PART LOAD VALUE
DB	DRY BULB	NS	NOT SPECIFIED
DC	DOUBLE-CONTAINED	NTS	NOT TO SCALE
DEG.	DEGREE(S)	OAT	OUTSIDE AIR TEMPERATURE
DET	DETAIL	OPER.WT	OPERATING WEIGHT
DIA	DIAMETER	OSA	OUTSIDE AIR
DIST	DISTANCE	P	PRESSURE
DN	DOWN	POC	POINT-OF-CONNECTION
DP	DEW POINT, OR DIFFERENTIAL PRESSURE	PRIM.	PRIMARY
DWG	DRAWING	PSI	POUNDS PER SQUARE INCH
DX	DIRECT EXPANSION	PSIA	POUNDS PER SQUARE INCH, ABSOLUTE
E	EXISTING	PSIG	POUNDS PER SQUARE INCH, GAUGE
EA	EACH	QTY	QUANTITY
EAT	ENTERING AIR TEMPERATURE	<R>	RELOCATE
ECONO.	ECONOMIZER	RECT	RECTANGULAR
EFF.	EFFICIENCY	REQD.	REQUIRED
ELEC.	ELECTRIC, OR ELECTRICAL	RF	ROOF
ESP	EXTERNAL STATIC PRESSURE	RIO	ROUGH-IN ONLY
EWT	ENTERING WATER TEMPERATURE	RL/R	RELOCATE
EXH	EXHAUST	RLA	RUNNING LOAD AMPS
EXP	EXPANSION	RND	ROUND
F	FILTER	RPM	REVOLUTIONS PER MINUTE
<F>	FUTURE	SCFM	STANDARD CUBIC FEET PER MINUTE
FCO	FLOOR CLEAN-OUT	SCH.	SCHEDULE
FF	FINISHED FLOOR	SECD.	SECONDARY
FIN/IN	FINS PER INCH	SENS.	SENSIBLE
FLA	FULL LOAD AMPS	SHT	SHEET
FLR	FLOOR	SP	STATIC PRESSURE
FM	FLOW METER	T	TEMPERATURE
FPM	FEET PER MINUTE	T-STAT	THERMOSTAT
FPS	FEET PER SECOND	TDH	TOTAL DEVELOPED HEAD
FRP	FIBER-GLASS REINFORCED PLASTIC	TEMP	TEMPERATURE
FRPM	FAN REVOLUTIONS PER MINUTE	TOT.	TOTAL
FT	FEET	TP	TRAP PRIMER/TOTAL PRESSURE
FU	FIXTURE UNIT	TSP	TOTAL STATIC PRESSURE
GA	GAUGE	TYP	TYPICAL
GAL	GALLON	UON	UNLESS OTHERWISE NOTED
GALV	GALVANIZED	UPS	UNINTERRUPTED POWER SUPPLY
GC	GENERAL CONTRACTOR	V/PH	VOLTS/PHASE
GPM	GALLON PER MINUTE	VEL	VELOCITY
HP	HORSEPOWER	VTR	VENT THRU ROOF
HR	HOUR	WB	WET BULB TEMPERATURE
HT	HEIGHT	WCO	WALL CLEAN-OUT
HTG	HEATING	WG	WATER GAUGE
HVAC	HEATING, VENTILATION, & AIR CONDITIONING	WPD	WATER PRESSURE DROP
I.E.	INVERT ELEVATION	WTR	WATER

CODES/REGULATIONS

THE CONTRACTOR SHALL COMPLY WITH ALL CODES, STATUTES AND ORDINANCES IN FORCE IN THE CITY OF SAN FRANCISCO INCLUDING:

CALIFORNIA MECHANICAL CODE	2016 EDITION
CALIFORNIA PLUMBING CODE	2016 EDITION
CALIFORNIA ENERGY CODE	2016 EDITION
CALIFORNIA BUILDING CODE (CBC)	2016 EDITION
CALIFORNIA FIRE CODE (CFC).	2016 EDITION
BUILDING ENERGY EFFICIENCY STANDARDS	2016 EDITION
LOCAL ORDINANCE(S), IF ANY.	

SCOPE OF WORK

MECHANICAL:

1-PROVIDE AND INSTALL SPLIT SYSTEM HEAT PUMP UNITS IN LIEU OF EXISTING HEAT PUMP SYSTEMS.

2-PROVIDE AND INSTALL DUCTS TO MODIFY THE EXISTING AIR DISTRIBUTION.

PLUMBING:

1-PROVIDE AND INSTALL CONDENSATE PIPING OR MODIFY THE EXISTING CONDENSATE PIPING.

2-PROVIDE AND INSTALL CONDENSATE DRAIN PANS FOR THE SPILIT UNITS.

KEY PLAN

NO.	DESCRIPTION	BY	DATE
3	DESIGN UPDATED		08/14/19
2	INTERNAL REVIEW		07/16/19
1	INTERNAL REVIEW		05/02/19
0	DD REVIEW SET		03/15/19

PROJECT:

THE CLIFF HOUSE

1090 POINT LOBOS AVE,
SAN FRANCISCO, CALIFORNIA

DWG. TITLE:

MECHANICAL COVER SHEET

BASE TRACKING:	J549069
DATE:	05/02/2019
SCALE:	AS SHOWN
BY:	THERMA TEAM

DWG. NO: M0.1

STATE OF CALIFORNIA
MECHANICAL SYSTEMS
CEC-NRCC-MCH-01-E (Revised 01/16) — CALIFORNIA ENERGY COMMISSION

CERTIFICATE OF COMPLIANCE	NRCC-MCH-01-E
Mechanical Systems	(Page 1 of 4)
Project Name: THE CLIFF HOUSE	Date Prepared: 5/1/2019

MECHANICAL COMPLIANCE FORMS & WORKSHEETS (check box if worksheet is included)

For detailed instructions on the use of this and all Energy Efficiency Standards compliance forms, refer to the 2016 Nonresidential Manual
Note: The Enforcement Agency may require all forms to be incorporated onto the building plans.

YES	NO	Comp.	Title
X		NRCC-MCH-01-E	Certificate of Compliance, Declaration. Required on plans for all submittals.
X		NRCC-MCH-01-E	Certificate of Compliance, Required Acceptance Tests (MCH-02-A to 11-A). Required on plans for all submittals.
X		NRCC-MCH-01-E	Certificate of Compliance, Required Acceptance Tests (MCH-12-A to 18-A). Required on plans where applicable.
X		NRCC-MCH-02-E	Mechanical Dry Equipment Summary is required for all submittals with Central Air Systems. It is optional on plans.
	X	NRCC-MCH-02-E (Part 2 of 2)	Mechanical Wet Equipment Summary is required for all submittals with chilled water, hot water or condenser water systems. It is optional on plans.
	X	NRCC-MCH-03E	Mechanical Ventilation and Reheat is required for all submittals with multiple zone heating and cooling systems. It is optional on plans.
	X	NRCC-MCH-07-E (Part 1 of 2)	Power Consumption of Fans. Required on plans where applicable
	X	NRCC-MCH-07-E (Part 2 of 2)	Power Consumption of Fans, Declaration. Required on plans where applicable

STATE OF CALIFORNIA
MECHANICAL SYSTEMS
CEC-NRCC-MCH-01-E (Revised 01/16) — CALIFORNIA ENERGY COMMISSION

CERTIFICATE OF COMPLIANCE	NRCC-MCH-01-E
Mechanical Systems	(Page 2 of 4)
Project Name: THE CLIFF HOUSE	Date Prepared: 5/1/2019

B. MECHANICAL HVAC ACCEPTANCE FORMS (check box for required compliance documents)
Test Performed By:
Designer:
This compliance document is to be used by the designer and attached to the plans. Listed below are all the acceptance tests for HVAC systems. The designer is required to check the applicable boxes for all acceptance tests that apply and list all equipment that requires an acceptance test. All equipment of the same type that requires a test, list the equipment description and the number of systems.

Installing Contractor:
The contractor who installed the equipment is responsible to either conduct the acceptance test themselves or have a qualified entity run the test for them. If more than one person has responsibility
for the acceptance testing, each person shall sign and submit the Certificate of Acceptance applicable to the portion of the construction or installation for which they are responsible.

Enforcement Agency:
Plancheck - The NRCC-MCH-01-E compliance document is not considered a completed document and is not to be accepted by the building department unless the correct boxes are checked.

Test Description		MCH-02-A	MCH-03-A	MCH-04-A	MCH-05-A	MCH-06-A	MCH-07-A	MCH-08-A	MCH-09-A	MCH-10-A	MCH-11-A
Equipment Requiring Testing or Verification	# of units	Outdoor Air	Single Zone Unitary	Air Distribution Ducts	Economizer Controls	Demand Control Ventilation (DCV)	Supply Fan VAV	Valve Leakage Test	Supply Water Temp. Reset	Hydronic System Variable Flow	Automatic Demand Shed Control
HP-1	1	N/A	N/A	N/A	N/A	N/A	N/A	N/A	N/A	N/A	N/A
HP-2	1	N/A	N/A	N/A	N/A	N/A	N/A	N/A	N/A	N/A	N/A
HP-3	1	N/A	N/A	N/A	N/A	N/A	N/A	N/A	N/A	N/A	N/A
HP-4	1	N/A	N/A	N/A	N/A	N/A	N/A	N/A	N/A	N/A	N/A
HP-5	1	N/A	N/A	N/A	N/A	N/A	N/A	N/A	N/A	N/A	N/A
HP-6	1	N/A	N/A	N/A	N/A	N/A	N/A	N/A	N/A	N/A	N/A

MECHANICAL SYSTEMS
CEC-NRCC-MCH-01-E (Revised 01/16)

CERTIFICATE OF COMPLIANCE	NRCC-MCH-01-E
Mechanical Systems	(Page 3 of 4)
Project Name: THE CLIFF HOUSE	Date Prepared: 5/1/2019

C. MECHANICAL HVAC ACCEPTANCE FORMS (check box for required compliance documents)
Designer:
This compliance document is to be used by the designer and attached to the plans. Listed below are all the acceptance tests for HVAC systems. The designer is required to check the applicable boxes for all acceptance tests that apply and list all equipment that requires an acceptance test. All equipment of the same type that requires a test, list the equipment description and the number of systems.

Installing Contractor:
The contractor who installed the equipment is responsible to either conduct the acceptance test themselves or have a qualified entity run the test for them. If more than one person has responsibility for the acceptance testing, each person shall sign and submit the Certificate of Acceptance applicable to the portion of the construction or installation for which they are responsible.

Enforcement Agency:
Plancheck - The NRCC-MCH-01-E compliance document is not considered a completed document and is not to be accepted by the building department unless the correct boxes are checked.
Inspector - Before occupancy permit is granted all newly installed process systems must be tested to ensure proper operations.

Test Description		MCH-12-A	MCH-13-A	MCH-14-A	MCH-15-A	MCH-16-A	MCH-17-A	MCH-18-A
Equipment Requiring Testing or Verification	# of units	Fault Detection & Diagnostics for DX Units	Automatic Fault Detection & Diagnostics for Air & Zone	Distributed Energy Storage DX AC Systems	Thermal Energy Storage (TES) Systems	Supply Air Temperature Reset Controls	Condenser Water Reset Controls	ECMS
HP-1	1	N/A	N/A	N/A	N/A	N/A	N/A	N/A
HP-2	1	N/A	N/A	N/A	N/A	N/A	N/A	N/A
HP-3	1	N/A	N/A	N/A	N/A	N/A	N/A	N/A
HP-4	1	N/A	N/A	N/A	N/A	N/A	N/A	N/A
HP-5	1	N/A	N/A	N/A	N/A	N/A	N/A	N/A
HP-6	1	N/A	N/A	N/A	N/A	N/A	N/A	N/A

HVAC SYSTEM REQUIREMENTS
CEC-NRCC-MCH-02-E (Revised 01/16) — CALIFORNIA ENERGY COMMISSION

CERTIFICATE OF COMPLIANCE:	NRCC-MCH-02-E
HVAC Dry System Requirements	(Page 1 of 3)
Project Name: THE CLIFF HOUSE	Date Prepared: 5/3/19

A. Equipment Tags and System Description[1] - Dry Systems	T-24 Sections	HP-1	HP-2	HP-3
MANDATORY MEASURES	*Reference to the Requirements in the Contract Documents*			
Heating Equipment Efficiency3	110.1 or 110.2(a)	N/A	N/A	N/A
Cooling Equipment Efficiency[3]	110.1 or 110.2(a)	M0.3	M0.3	M0.3
HVAC or Heat Pump Thermostats	110.2(b), 110.2(c)	N/A	N/A	N/A
Furnace Standby Loss Control	110.2(d)	N/A	N/A	N/A
Low Leakage AHUs	110.2(f)	N/A	N/A	N/A
Ventilation[4]	120.1(b)	N/A	N/A	N/A
Demand Control Ventilation[5]	120.1(c)4	N/A	N/A	N/A
Occupant Sensor Ventilation Control[6]	120.1(c)5, 120.2(e)3	N/A	N/A	N/A
Shutoff and Reset Controls[7]	120.2(e)	N/A	N/A	N/A
Outdoor Air and Exhaust Damper Control	120.2(f)	N/A	N/A	N/A
Isolation Zones	120.2(g)	N/A	N/A	N/A
Automatic Demand Shed Controls	120.2(h)	N/A	N/A	N/A
Economizer FDD	120.2(i)	N/A	N/A	N/A
Duct Insulation	120.4	N/A	N/A	N/A
PRESCRIPTIVE MEASURES				
Equipment is sized in conformance with 140.4 (a & b)	140.4(h)2, 140.4(h)5	YES	YES	YES
Supply Fan Pressure Control	140.4(c)	N/A	N/A	N/A
Simultaneous Heat/Cool[8]	140.4(d)	N/A	N/A	N/A
Economizer	140.4(e)	N/A	N/A	N/A
Heat and Cool Air Supply Reset	140.4(f)	N/A	N/A	N/A
Electric Resistance Heating[9]	140.4(g)	N/A	M0.3	M0.3
Duct Leakage Sealing and Testing.[10]	140.4(1)	N/A	N/A	N/A

Notes:
1. Provide equipment tags (e.g. AHU 1 to 10) and system description (e.g. Single Duct VAVreheat) as appropriate. Multiple units with common requirements can be
grouped together.
2. Provide references to plans (i.e. Drawing Sheet Numbers) and/or specifications (including Section name/number and relevant paragraphs) where each requirement is
specified. Enter "N/A" if the requirement is not applicable to this system.
3. The referenced plans and specifications must include all of the following information: equipment tag, equipment nominal capacity, Title 24 minimum efficiency
requirements, and actual rated equipment efficiencies. Where multiple efficiency requirements are applicable (e.g. full- and part-load) include all. Where appliance
standards apply (110.1), identify where equipment is required to be listed per Title 20 1601 et seq.
4. Identify where the ventilation requirements are documented for each central HVAC system. Include references to both central unit schedules and sequences of
operation. If one or more spaces is naturally ventilated identify where this is documented in the plans and specifications. Multiple zone central air systems must also
provide a MCH-03-E compliance document.
5. If one or more spaces has demand controlled ventilation identify where it is specified including the sensor specifications and the sequence of operation.
6. If one or more space has occupant sensor ventilation control identify where it is specified including the sensor specifications and the sequence of operation

HVAC SYSTEM REQUIREMENTS
CEC-NRCC-MCH-02-E (Revised 01/16) — CALIFORNIA ENERGY COMMISSION

CERTIFICATE OF COMPLIANCE	NRCC-MCH-02-E
HVAC Dry System Requirements	(Page 1 of 3)
Project Name: THE CLIFF HOUSE	Date Prepared: 5/3/19

A. Equipment Tags and System Description[1] - Dry Systems	T-24 Sections	HP-4	HP-5	HP-6
MANDATORY MEASURES	*Reference to the Requirements in the Contract Documents*			
Heating Equipment Efficiency3	110.1 or 110.2(a)	N/A	N/A	N/A
Cooling Equipment Efficiency[3]	110.1 or 110.2(a)	M0.3	M0.3	M0.3
HVAC or Heat Pump Thermostats	110.2(b), 110.2(c)	N/A	N/A	N/A
Furnace Standby Loss Control	110.2(d)	N/A	N/A	N/A
Low Leakage AHUs	110.2(f)	N/A	N/A	N/A
Ventilation[4]	120.1(b)	N/A	N/A	N/A
Demand Control Ventilation[5]	120.1(c)4	N/A	N/A	N/A
Occupant Sensor Ventilation Control[6]	120.1(c)5, 120.2(e)3	N/A	N/A	N/A
Shutoff and Reset Controls[7]	120.2(e)	N/A	N/A	N/A
Outdoor Air and Exhaust Damper Control	120.2(f)	N/A	N/A	N/A
Isolation Zones	120.2(g)	N/A	N/A	N/A
Automatic Demand Shed Controls	120.2(h)	N/A	N/A	N/A
Economizer FDD	120.2(i)	N/A	N/A	N/A
Duct Insulation	120.4	N/A	N/A	N/A
PRESCRIPTIVE MEASURES				
Equipment is sized in conformance with 140.4 (a & b)	140.4(h)2, 140.4(h)5	YES	YES	YES
Supply Fan Pressure Control	140.4(c)	N/A	N/A	N/A
Simultaneous Heat/Cool[8]	140.4(d)	N/A	N/A	N/A
Economizer	140.4(e)	N/A	N/A	N/A
Heat and Cool Air Supply Reset	140.4(f)	N/A	N/A	N/A
Electric Resistance Heating[9]	140.4(g)	N/A	M0.3	M0.3
Duct Leakage Sealing and Testing.[10]	140.4(1)	N/A	N/A	N/A

Notes:
1. Provide equipment tags (e.g. AHU 1 to 10) and system description (e.g. Single Duct VAVreheat) as appropriate. Multiple units with common requirements can be
grouped together.
2. Provide references to plans (i.e. Drawing Sheet Numbers) and/or specifications (including Section name/number and relevant paragraphs) where each requirement is
specified. Enter "N/A" if the requirement is not applicable to this system.
3. The referenced plans and specifications must include all of the following information: equipment tag, equipment nominal capacity, Title 24 minimum efficiency
requirements, and actual rated equipment efficiencies. Where multiple efficiency requirements are applicable (e.g. full- and part-load) include all. Where appliance
standards apply (110.1), identify where equipment is required to be listed per Title 20 1601 et seq.
4. Identify where the ventilation requirements are documented for each central HVAC system. Include references to both central unit schedules and sequences of
operation. If one or more spaces is naturally ventilated identify where this is documented in the plans and specifications. Multiple zone central air systems must also
provide a MCH-03-E compliance document.
5. If one or more spaces has demand controlled ventilation identify where it is specified including the sensor specifications and the sequence of operation.
6. If one or more space has occupant sensor ventilation control identify where it is specified including the sensor specifications and the sequence of operation

MECHANICAL SYSTEMS
CEC-NRCC-MCH-01-E (Revised 01/16) — CALIFORNIA ENERGY COMMISSION

CERTIFICATE OF COMPLIANCE	NRCC-MCH-01-E
Mechanical Systems	(Page 4 of 4)
Project Name: THE CLIFF HOUSE	Date Prepared: 5/1/2019

DOCUMENTATION AUTHOR'S DECLARATION STATEMENT
I: I certify that this Certificate of Compliance documentation is accurate and complete.

Documentation Author Name:	JASON OSTRANDER	Documentation Author Signature:	
Company:	THERMA LLC	Signature Date:	5/1/2019
Address:	1601 LAS PLUMAS AVENUE	CEA/ HERS Certification Identification (if applicable):	
City/State/Zip:	SAN JOSE, CA. 95133	Phone:	(408)347-3400

RESPONSIBLE PERSON'S DECLARATION STATEMENT
I certify the following under penalty of perjury, under the laws of the State of California:
1. The information provided on this Certificate of Compliance is true and correct.
2. I am eligible under Division 3 of the Business and Professions Code to accept responsibility for the building design or system design identified on this Certificate of Compliance (responsible designer).
3. The energy features and performance specifications, materials, components, and manufactured devices for the building design or system design identified on this Certificate of Compliance conform to the requirements of Title 24, Part 1 and Part 6 of the California Code of Regulations.
4. The building design features or system design features identified on this Certificate of Compliance are consistent with the information provided on other applicable compliance documents, worksheets, calculations, plans and specifications submitted to the enforcement agency for approval with this building permit application.
5. I will ensure that a completed signed copy of this Certificate of Compliance shall be made available with the building permit(s) issued for the building, and made available to the enforcement agency for all applicable inspections. I understand that a completed signed copy of this Certificate of Compliance is required to be included with the documentation the builder provides to the building owner at occupancy.

Responsible Designer Name:	MEHRDAD ALIPOUR, P.E	Responsible Designer Signature:	Mehrdad Alipour
Company:	THERMA LLC	Date Signed:	5/1/2019
Address:	1601 LAS PLUMAS AVENUE	License:	1027316
City/State/Zip:	SAN JOSE, CA. 95133	Phone:	(408)347-3400

HVAC SYSTEM REQUIREMENTS
CEC-NRCC-MCH-02-E (Revised 01/16)

CERTIFICATE OF COMPLIANCE:	NRCC-MCH-02-E
HVAC Wet System Requirements	(Page 3 of 3)
ProjectName: THE CLIFF HOUSE	Date Prepared: 5/3/19

DOCUMENTATION AUTHOR'S DECLARATION STATEMENT
I: I certify that this Certificate of Compliance documentation is accurate and complete.

Documentation Author Name:	JASON OSTRANDER	Documentation Author Signature:	
Company:	THERMA LLC	Signature Date:	5/3/19
Address:	1601 LAS PLUMAS AVENUE	CEA/ HERS Certification Identification (if applicable):	
City/State/Zip:	SAN JOSE, CA. 95133	Phone:	(408)347-3400

RESPONSIBLE PERSON'S DECLARATION STATEMENT
I certify the following under penalty of perjury, under the laws of the State of California:
1. The information provided on this Certificate of Compliance is true and correct.
2. I am eligible under Division 3 of the Business and Professions Code to accept responsibility for the building design or system design identified on this Certificate of Compliance (responsible designer).
3. The energy features and performance specifications, materials, components, and manufactured devices for the building design or system design identified on this Certificate of Compliance conform to the requirements of Title 24, Part 1 and Part 6 of the California Code of Regulations.
4. The building design features or system design features identified on this Certificate of Compliance are consistent with the information provided on other applicable compliance documents, worksheets, calculations, plans and specifications submitted to the enforcement agency for approval with this building permit application.
5. I will ensure that a completed signed copy of this Certificate of Compliance shall be made available with the building permit(s) issued for building, and made available to the enforcement agency for all applicable inspections. I understand that a completed signed copy of this Certificate of Compliance is required to be included with the documentation the builder provides to the building owner at

Responsible Designer Name:	MEHRDAD ALIPOUR, P.E	Responsible Designer Signature:	Mehrdad Alipour
Company:	THERMA LLC	Date Signed:	5/3/19
Address:	1601 LAS PLUMAS AVENUE	License:	1027316
City/State/Zip:	SAN JOSE, CA. 95133	Phone:	(408)347-3400

THERMA
1601 Las Plumas Ave
San Jose, CA. 95133-1613
(408) 347-3400
St Cont Lic 1027316

This drawing is and shall remain the PROPERTY OF THERMA CORPORATION whether the PROJECT for which it was made is EXECUTED or NOT. It is to be used THERMA CORPORATION PERSONNEL ONLY and is NOT to be used by anyone else for any purpose except by prior AGREEMENT IN WRITING WITH THERMA CORPORATION

MEHRDAD ALIPOUR
M054470
Exp. 6/30/19
MECHANICAL
STATE OF CALIFORNIA

KEY PLAN

NO.	DESCRIPTION	BY	DATE
3	DESIGN UPDATED		08/14/19
2	INTERNAL REVIEW		07/16/19
1	INTERNAL REVIEW		05/02/19
0	DD REVIEW SET		03/15/19

PROJECT:

THE CLIFF HOUSE

1090 POINT LOBOS AVE,
SAN FRANCISCO, CALIFORNIA

DWG. TITLE:

MECHANICAL TITLE-24

BASE TRACKING: J549069	DWG. NO:
DATE: 05/02/2019	M0.2
SCALE: AS SHOWN	
BY: THERMA TEAM	

CONDENSER UNIT SCHEDULE

TAG	MFR	MODEL	NOMINAL TONS	REFR TYPE	V/PH	MCA	MOCP	SEER	EER	GAS LINE DIA (IN.)	LIQ LINE DIA (IN.)	#COMPR.	#CRTS	WT (LBS)	HT W/O LEVELING	EQUIP SERVED	NOTES
CU-1	GUARDIAN	THE60B31S	5	R410A	208/3	21	35	14	12	1-1/8	3/8	1	1	261	46"	HP-1	1,3,4,5
CU-2	JOHNSON COMTROLS	J15PCC00A2GAB4	15	R410A	208/3	65	80	-	11	1-5/8	7/8	1	1	947	45"	HP-2	1,2,5,6
CU-3	JOHNSON CONTROLS	J15PCC00A2GAB4	15	R410A	208/3	65	80	-	11	1-5/8	7/8	1	1	947	45"	HP-3	1,2,5,6
CU-4	GUARDIAN	THE60B31S	5	R410A	208/3	21	35	14	12	1-1/8	3/8	1	1	261	46"	HP-4	1,3,4,5
CU-5	JOHNSON CONTROLS	J20PDC00A2GAB4	20	R410A	208/3	80	100	-	11	1-3/8	5/8	2	2	1090	50"	HP-5	1,2,5,6
CU-6	GUARDIAN	THE48B31S	4	R410A	208/3	18	30	14	12	7/8	3/8	1	1	251	43"	HP-6	1,3,4,5

1 DISCONNECT AND RECONNECT THE ELECTRICAL.
2 COPPER/ALUMINUM COILS
3 DURABLE FINISH-THE COATED STEEL WIRE FAN GUARD, COATED EXTERNAL FASTENERS, AND PRE-TREATED G90-EQUIVALENT GALVANIZED STEEL CHASSIS COMPONENTS RESIST AND CORROSION AND RUST CREEP.
4 RUGGED COIL PROTECTION
5 EQUIPMENT MUST MEET ALL APPLICABLE REQUIREMENTS OF CALIFORNIA TITLE-24 CODES
6 SAFETY MONITORING SWITCH BY FACTORY

SPLIT SYSTEM HEAT PUMP UNIT SCHEDULE

TAG	MFR	MODEL	NOMINAL TONS	DESIGN CFM	OSA	REFRIG. TYPE	SUCTION LINE OD (IN)	LIQUID LINE OD (IN)	#CRTS	SUPPLY FAN RPM	SUPPLY FAN ESP (IN)	SUPPLY FAN TSP (IN)	SUPPLY FAN BHP	SUPPLY FAN HP	EA DB	EA WB	LA DB	LA WB	NET COOLING (MBH) SENS	NET COOLING (MBH) TOT	ELECTRICAL HTG. CAP (kW)	ELECTRICAL HTG. V/PH	ELECTRICAL V/PH	ELECTRICAL MCA	ELECTRICAL MOCP	ECONOMIZER Y/N	SMOKE DET IN SA? *	HT W/O ** LEVELING	WT ** (LBS)	AREA SERVED	NOTES
HP-1	GUARDIAN	ME20DN21	5	2032	200	R410A	7/8	3/8	1	-	0.10	-	-	-	78	64	58	56	43	54	-	-	208/1	6.8	15	N	Y	22"	153	ADMIN	1,2,3,4,5,6,8,9,10,11
HP-2	JOHNSON CONTROLS	J15NCC00E6AAA2	15	4800	2,700	R410A	1-5/8	7/8	1	767	1.20	1.30	2.28	5	78	64	53	52	128	167	10	208/3	208/3	44.0	45	N	Y	75"	798	BANQUET	1,2,3,4,5,8,11,12
HP-3	JOHNSON CONTROLS	J15NCC00E6AAA2	15	4800	2,300	R410A	1-5/8	7/8	1	767	1.20	1.30	2.28	5	78	64	53	52	128	167	10	208/3	208/3	44.0	45	N	Y	75"	798	BISTRO	1,2,3,4,5,8,11,12
HP-4	GUARDIAN	ME20DN21	5	1600	225	R410A	7/8	3/8	1	-	0.47	-	-	-	78	64	56	53	39	54	-	-	208/1	7.0	15	N	Y	55"	153	LOBBY	1,2,3,4,5,8,9,10,11
HP-5	JOHNSON CONTROLS	J20NMC00F2BAA2	20	8050	2,280	R410A	1-3/8	7/8	2	1005	1.20	1.27	5.46	7.50	80	61	55	51	206	215	20	208/3	208/3	77.0	80	N	Y	65"	938	DINING	1,2,3,4,5,7,8,11,12
HP-6	GUARDIAN	ME16CN21	4	1400	300	R410A	7/8	3/8	1	-	0.40	-	-	-	78	64	56	53	33	45	5	208/1	208/1	30.0	35	N	Y	22"	129	GIFT SHOP	1,2,3,4,5,6,8,9,10,11

1 DISCONNECT AND RECONNECT THE ELECTRICAL.
2 SMOKE DETECTORS IN SA PLENUM
3 ELECTRICIAN TO CONFIRM REQUIREMENTS WITH FINAL SUBMITTALS, PRIOR TO CONSTRUCTION
4 EQUIPMENT MUST MEET ALL APPLICABLE REQUIREMENTS OF CALIFORNIA TITLE-24 CODES
5 SEE DRAWING * M3.1 ** FOR SUPPLY/RETURN AIR CONFIGURATION
6 SECONDARY CONDENSATE DRAIN PAN BY THERMA
7 UNIT SHALL BE CONTROLLED WITH A VFD. FIELD MOUNT VFD SHALL BE WIRED BY ELECTRICIAN
8 ALUMININUM COIL/FIN
9 MODULAR BLOWER WITH STANDARD ECM MOTORS
10 CABINET IS INSULATED WITH FOIL FACED INSULATION TO PREVENT SWEATING
11 THERMAL PLASTIC DRAIN PAN
12 UNIT CABINET CONSTRUCTED OF POWDER PAINTED STEEL. CERTIFIED AT 750 HOURS SALT SPRAY TEST

PIPE INSULATION THICKNESS (Per 2016 California Energy Code, Table 120.3-A)

Fluid Temperature Range (°F)	Conductivity Range (Btu-inch/hr/sf/F)	Insulation Mean Rating Temperature (°F)	Nominal Pipe Diameter (inch) <1	1 to <1.5	1.5 to <4	4 to <8	8 and larger
Space heating, Hot Water (steam, steam condensate, hot water) and Service Water Heating <Notes 2,3>							
Above 350	0.32-.034	250	4.5	5.0	5.0	5.0	5.0
251-350	0.29-0.31	200	3.0	4.0	4.5	4.5	4.5
201-250	0.27-0.30	150	2.5	2.5	2.5	3.0	3.0
141-200	0.25-0.29	125	1.5	1.5	2.0	2.0	2.0
105-140	0.22-0.28	100	1.0	1.5	1.5	1.5	1.5
Space cooling systems (chilled water, refrigerant, and brine) <Notes 1,2,3>							
40-60	0.21-0.27	75	0.50	0.50	1.00	1.00	1.00
below 40	0.20-0.26	50	1.00	1.50	1.50	1.50	1.50

Notes:
1) Provide Class I/II Vapor retarder if located outside.
2) If exposed to weather, provide protection per CEC 120.3
3) All penetrations and joints shall be sealed.

PIPING MATERIALS SCHEDULE

SYSTEM	ABBREV.	SIZE	MATERIAL
MECHANICAL PIPING			
REFRIGERANT GAS/LIQUID	REFRIG.	2" OR SMALLER	COPPER TYPE "L", ACR
PLUMBING PIPING			
CONDENSATE DRAIN INSIDE BUILDING	CD	1 1/4" OR SMALLER	COPPER TYPE "M"
CONDENSATE DRAIN INSIDE BUILDING	CD	1 1/2" OR LARGER	COPPER TYPE "DWV"

DUCT MATERIAL SCHEDULE

SYSTEM	TYPE	LOCATION	SIZE	MATERIALS	INSULATION[1]
SUPPLY, RETURN	RECTANGULAR	BELOW CEILING	ALL	GALVANIZED	EXTERNAL

NOTE 1: ALL SUPPLY & RETURN DUCTWORK SHALL BE INSULATED PER CALIFORNIA ENERGY CODE (TITLE-24):
A) MINIMUM R-8 INSULATION FOR DUCTWORK LOCATED OUTDOOR, OR
IN A SPACE BETWEEN ROOF AND INSULATED CEILING, OR
IN A SPACE DIRECTLY UNDER THE ROOF WITH FIXED VENTS TO THE OUTSIDE OR UNCONDITIONED SPACE, OR
IN AN UNCONDITIONED CRAWL-SPACE
IN OTHER UNCONDITIONED SPACES
B) ALL OTHER INSULATION SHALL BE MINIMUM R-4.2.
NOTE 2: ENGINEER TO SPECIFY INSULATION IF REQUIRED FOR ACOUSTICAL OR THERMAL-GAIN REASONS. (NOT REQUIRED BY TITLE-24)
NOTE 3: FIELD TO CHECK PROJECT SPECIFIC REQUIREMENTS (FOR DATA CTR, CLEAN RM, LAB, ETC. SPACES) WITH ENGINEER OF RECORD.

GENERAL NOTES:
I) APPROVED LINING MATERIALS, INSTALLED WITHIN DUCTS AND PLENUMS SHALL HAVE A MOLD, HUMIDITY AND EROSION RESISTANT SURFACE THAT MEET THE REQUIREMENTS OF CMC SECTION 605.0 AND CHAPTER 17.
II) ALL MATERIALS EXPOSED WITHIN DUCTS OR PLENUMS SHALL HAVE A FLAME SPREAD INDEX OF NOT MORE THAN 25, AND SMOKE DEVELOPMENT RATING OF NOT MORE THAN 50 PER CMC SECTION 602.2
III) ALL INSULATION MATERIALS APPLIED TO THE EXTERIOR OF DUCTS LOCATED INSIDE THE BUILDING SHALL HAVE A FLAME SPREAD OF NOT MORE THAN 25, AND SMOKE-DENSITY NOT MORE THAN 50 WHEN TESTED AS A COMPOSITE INSTALLATION PER CMC 605.0
IV) ALL FACTORY MADE AIR DUCTS SHALL BE CLASS 1 OR 0 LISTED DUCTS PER CMC SECTION 604.3

CALGREEN REQUIREMENT FOR DUCT COVERING:
AT THE TIME OF ROUGH INSTALLATION, OR DURING STORAGE ON THE CONSTRUCTION SITE AND UNTIL FINAL STARTUP OF THE HEATING AND COOLING EQUIPMENT, ALL DUCT AND OTHER RELATED AIR DISTRIBUTION COMPONENT OPENINGS SHALL BE COVERED WITH TAPE, PLASTIC, SHEET METAL OR OTHER METHODS ACCEPTABLE TO THE ENFORCING AGENCY TO REDUCE THE AMOUNT OF DUST OR DEBRIS WHICH MAY COLLECT IN THE SYSTEM PER CGBSC SECTION 5.504.3

THERMA
1601 Los Plumas Ave
San Jose, CA 95133-1613
(408) 347-3400
St Cont Lic 1027316

This drawing is and shall remain the PROPERTY OF THERMA CORPORATION whether the PROJECT for which it was made is EXECUTED or NOT. It is to be used THERMA CORPORATION PERSONNEL ONLY and is NOT to be used by anyone else for any purpose except by prior AGREEMENT IN WRITING WITH THERMA CORPORATION

REGISTERED PROFESSIONAL ENGINEER
M. BEHRAVAN
M-04470
Exp. 6/30/19
MECHANICAL
STATE OF CALIFORNIA

KEY PLAN

NO.	DESCRIPTION	BY	DATE
3	DESIGN UPDATED		08/14/19
2	INTERNAL REVIEW		07/16/19
1	INTERNAL REVIEW		05/02/19
0	DD REVIEW SET		03/15/19

PROJECT:

THE CLIFF HOUSE

1090 POINT LOBOS AVE,
SAN FRANCISCO, CALIFORNIA

DWG. TITLE:

MECHANICAL SCHEDULES

BASE TRACKING: J549069
DATE: 05/02/2019
SCALE: AS SHOWN
BY: THERMA TEAM

DWG. NO: M0.3

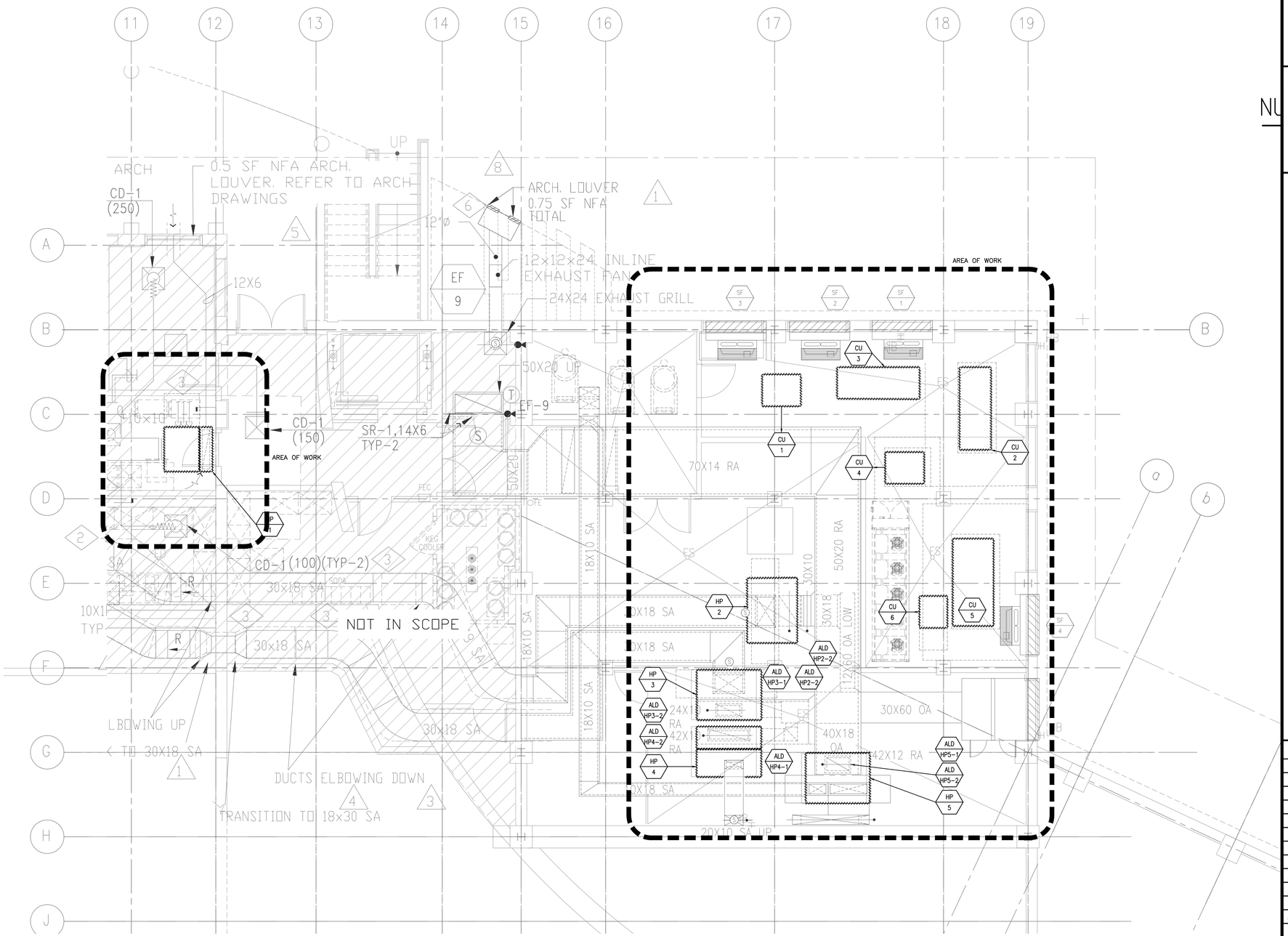

SCALE: 1/4" = 1'-0"

0 1 2 4 8

THERMA
1601 Los Plumas Ave
San Jose, CA. 95133-1613
(408) 347-3400
St Cont Lic 1027316

This drawing is and shall remain the PROPERTY OF THERMA CORPORATION whether the PROJECT for which it was made is EXECUTED or NOT. It is to be used THERMA CORPORATION PERSONNEL ONLY and is NOT to be used by anyone else for any purpose except by prior AGREEMENT IN WRITING WITH THERMA CORPORATION

REGISTERED PROFESSIONAL ENGINEER
M. MEHRAVAN
M-14470
Exp. 6/30/19
MECHANICAL
STATE OF CALIFORNIA

KEY PLAN

NO.	DESCRIPTION	BY	DATE
3	DESIGN UPDATED		08/14/19
2	INTERNAL REVIEW		07/16/19
1	INTERNAL REVIEW		05/02/19
0	DD REVIEW SET		03/15/19

PROJECT:

THE CLIFF HOUSE

1090 POINT LOBOS AVE,
SAN FRANCISCO, CALIFORNIA

DWG. TITLE:

MECHANICAL DEMO PARTIAL GROUND FLOOR PLAN

BASE TRACKING: J549069	
DATE: 05/02/2019	
SCALE: AS SHOWN	
BY: THERMA TEAM	

DWG. NO:

MD2.0.1

K:\Projects\J549069\Dwgs-SHEETS\MD201.dwg, 9/4/19 16:06:07, mbehravan

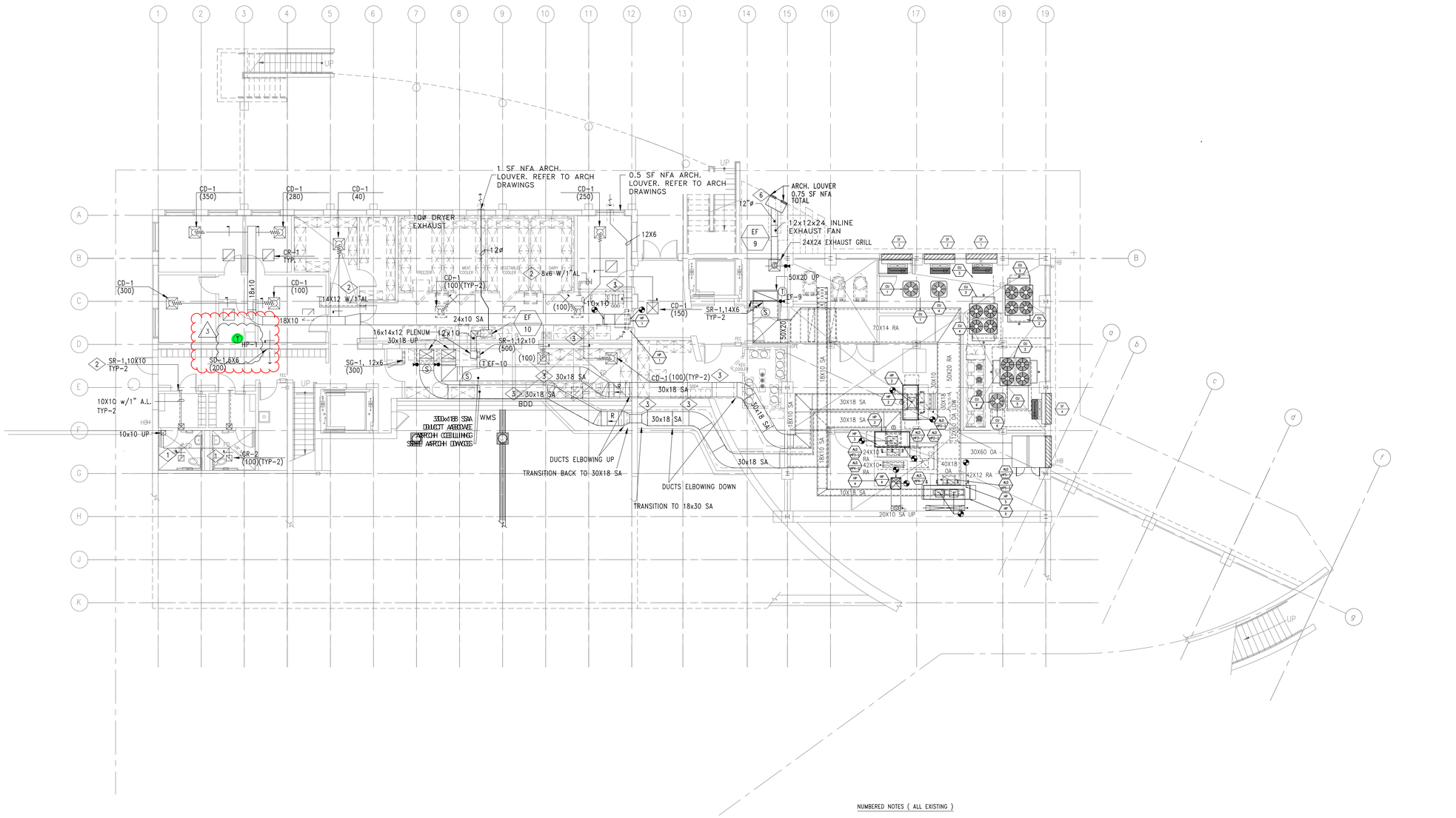

NUMBERED NOTES (ALL EXISTING)

1. INSTALLED AND PROVIDED YOUNG 896 CONCEALED AIR SPLIT REGULATOR FOR DIFFUSERS LOCATED WITHIN INACCESSIABLE CEILING.
2. INSTALLED ALL TRANSFER AIR DUCTS ACOUSTICALLY LINED. PROVIDED 2 ELBOWED SECTION OF DUCT.
3. INSTALLED DUCTWORK AT HIGH LEVEL.
4. PROVIDED LINT FILTER FOR LAUNDRY ROOM DRYER EXHAUST DUCT. DUCT TO BE ALUMINUM OR STAINLESS STEEL WITH NO FASTENERS PENETRATING DUCT, OR SCREENS WHERE EXHAUSTED TO OUTSIDE. PROVIDE BACKDRAFT DAMPER AT WALL. INSTALL DUCTWORK PER MANUFACTURER REQUIREMENTS. EF-9 & EF-10 TO BE WALL MOUNTED AS HIGH AS POSSIBLE.
5. ELEVATOR MACHINE ROOM EXHAUST DUCT TERMINATED AT SAME CENTERLINE ELEVATION AS FLUES.
6. REFRIGERANT PIPING AND CONTROLS CONDUITS TO CU-1. CONDENSATE DRAIN TO PLUMBING DRAIN. REFER TO PLUMBING DRAWINGS.

SCALE: 1/8" = 1'-0"
0 4 8 16

THERMA
1601 Las Plumas Ave
San Jose, CA. 95133-1613
(408) 347-3400
St Cont Lic 1027316

This drawing is and shall remain the PROPERTY OF THERMA CORPORATION whether the PROJECT for which it was made is EXECUTED or NOT. It is to be used THERMA CORPORATION PERSONNEL ONLY and is NOT to be used by anyone else for any purpose except by prior AGREEMENT IN WRITING WITH THERMA CORPORATION

REGISTERED PROFESSIONAL ENGINEER
MEHRDAD BEHRAVAN
M-14470
Exp. 6/30/19
MECHANICAL
STATE OF CALIFORNIA

KEY PLAN

NO.	DESCRIPTION	BY	DATE
3	DESIGN UPDATED		08/14/19
2	INTERNAL REVIEW		07/16/19
1	INTERNAL REVIEW		05/02/19
0	DD REVIEW SET		03/15/19

PROJECT:

THE CLIFF HOUSE

1090 POINT LOBOS AVE,
SAN FRANCISCO, CALIFORNIA

DWG. TITLE:

MECHANICAL OVERALL GROUND FLOOR PLAN

BASE TRACKING: J549069	DWG. NO:
DATE: 05/02/2019	M2.0.0
SCALE: AS SHOWN	
BY: THERMA TEAM	

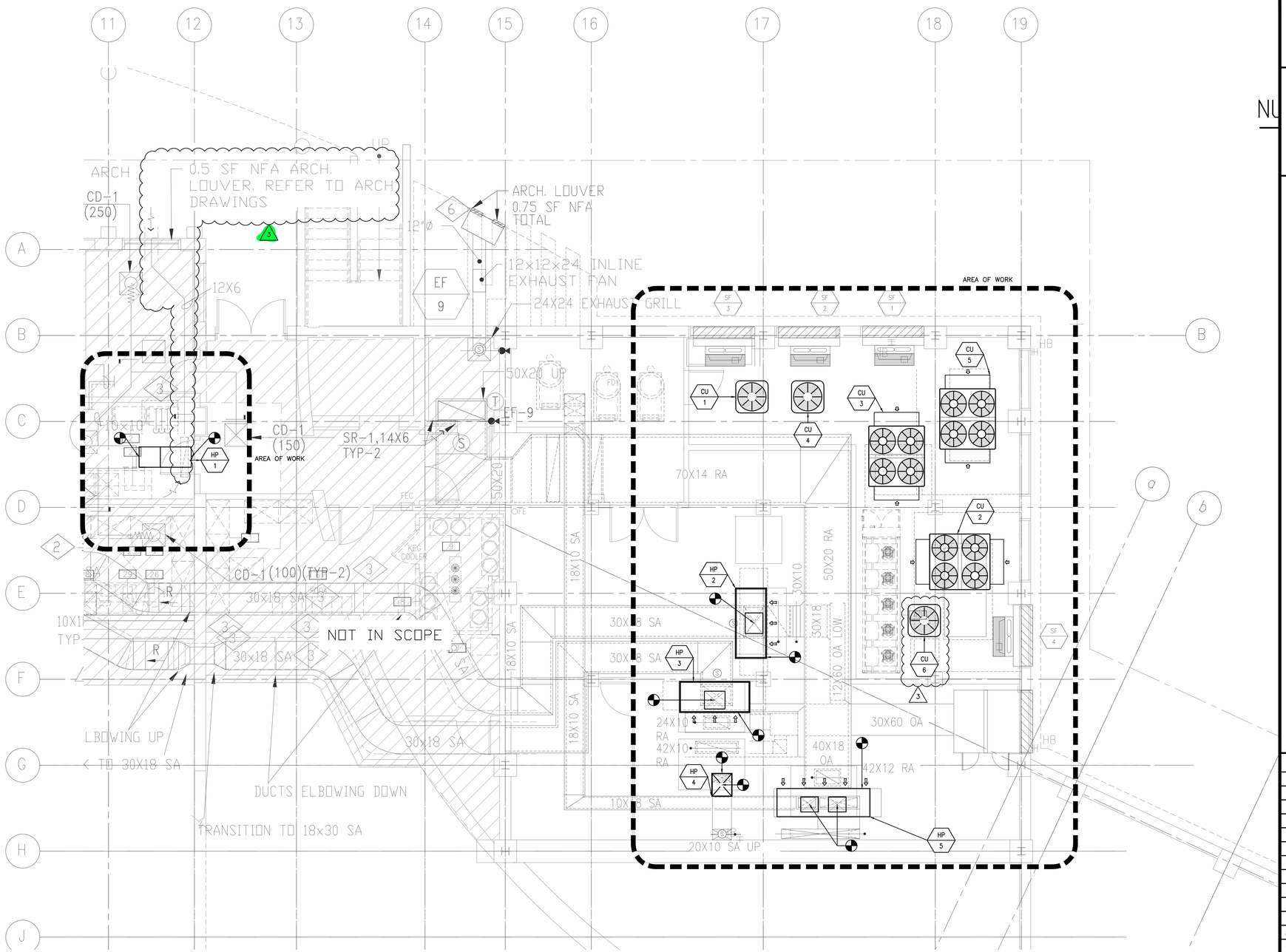

NUMBERED NOTES (ALL EXISTING)

1. INSTALLED AND PROVIDED YOUNG 896 CONCEALED AIR SPLIT REGULATOR FOR DIFFUSERS LOCATED WITHIN INACCESSABLE CEILING.
2. INSTALLED ALL TRANSFER AIR DUCTS ACOUSTICALLY LINED. PROVIDED Z ELBOWED SECTION OF DUCT.
3. INSTALLED DUCTWORK AT HIGH LEVEL.
4. PROVIDED LINT FILTER FOR LAUNDRY ROOM DRYER EXHAUST DUCT. DUCT TO BE ALUMINUM OR STAINLESS STEEL WITH NO FASTENERS PENETRATING DUCT, OR SCREENS WHERE EXHAUSTED TO OUTSIDE. PROVIDE BACKDRAFT DAMPER AT WALL. INSTALL DUCTWORK PER MANUFACTURER REQUIREMENTS. EF-9 & EF-10 TO BE WALL MOUNTED AS HIGH AS POSSIBLE.
5. ELEVATOR MACHINE ROOM EXHAUST DUCT TERMINATED AT SAME CENTERLINE ELEVATION AS FLUES.
6. REFRIGERANT PIPING AND CONTROLS CONDUITS TO CU-1. CONDENSATE DRAIN TO PLUMBING DRAIN. REFER TO PLUMBING DRAWINGS.

GENERAL NOTES

A. FINAL CU AND HP UNIT LOCATIONS TO BE FIELD MODIFIED IF REQUIRED

B. EXISTING REFRIGERANT PIPING TO BE FIELD MODIFIED FOR CONNECTION TO NEW SPLIT SYSTEMS IF REQUIRED

SCALE: 1/4" = 1'-0"
0 1 2 4 8

THERMA
1601 Los Plumas Ave
San Jose, CA. 95133-1613
(408) 347-3400
St Cont Lic 1027316

This drawing is and shall remain the PROPERTY OF THERMA CORPORATION whether the PROJECT for which it was made is EXECUTED or NOT. It is to be used THERMA CORPORATION PERSONNEL ONLY and is NOT to be used by anyone else for any purpose except by prior AGREEMENT IN WRITING WITH THERMA CORPORATION

REGISTERED PROFESSIONAL ENGINEER
MEHRDAD BEHRAVAN
M 054470
Exp. 6/30/19
MECHANICAL
STATE OF CALIFORNIA

NU

KEY PLAN

NO.	DESCRIPTION	BY	DATE
3	DESIGN UPDATED		08/14/19
2	INTERNAL REVIEW		07/16/19
1	INTERNAL REVIEW		05/02/19
0	DD REVIEW SET		03/15/19

PROJECT:

THE CLIFF HOUSE

1090 POINT LOBOS AVE,
SAN FRANCISCO, CALIFORNIA

DWG. TITLE:

MECHANICAL PARTIAL
GROUND FLOOR PLAN

BASE TRACKING: J549069	DWG. NO:
DATE: 05/02/2019	M2.0.1
SCALE: AS SHOWN	
BY: THERMA TEAM	

K:\Projects\J549069\Dwgs-SHEETS\M201.dwg, 9/4/19 16:05:06, mbehravan

THERMA
1601 Las Plumas Ave
San Jose, CA. 95133-1613
(408) 347-3400
St Cont Lic 1027316

This drawing is and shall remain the PROPERTY OF THERMA CORPORATION whether the PROJECT for which it was made is EXECUTED or NOT. It is to be used THERMA CORPORATION PERSONNEL ONLY and is NOT to be used by anyone else for any purpose except by prior AGREEMENT IN WRITING WITH THERMA CORPORATION

REGISTERED PROFESSIONAL ENGINEER
MEHRDAD BEHRAVAN
M054470
Exp. 6/30/19
MECHANICAL
STATE OF CALIFORNIA

NUMBERED NOTES (ALL EXISTING)

1. INSTALLED FULL LENGTH OF DISHWASHER EXHAUST DUCT IS STAINLESS STEEL.
2. INSTALLED ARCH. RETURN AIR GRILLE
3. INSTALLED FIRE RATED ENCLOSURE UP TO KITCHEN ROOF WELL (SAD).
4. INSTALLED SIDEWALL LINEAR DIFFUSERS, PROVIDED 5 FOOT ACOUSTICALLY LINED PLE SECTIONS.
5. INSTALLED TRANSFER AIR DUCTWORK ACOUSTICALLY LINED. PROVIDED Z ELBOWED D CONFIGURATION.
6. INSTALLED YOUNG 896 CONCEALED AIR SPLIT REGULATOR FOR DIFFUSERS LOCATED W INACCESSIBLE CEILING.
7. INSTALLED HORIZONTAL SECTION OF GREASE DUCT HAD A MINIMUM OF 2% SLOPE DO TOWARDS GREASE HOOD.
8. INSTALLED GREASE DUCT CLEAN OUT ACCESS OPENINGS, SPRINKLERS, AND ACCESSO REQUIRED.
9. INSTALLED CEILING LINEAR DIFFUSER, PROVIDED 5 FOOT PLENUM SECTIONS AND REM DAMPER OPERATORS. ALL LINEAR DIFFUSER PLENUM BOXES ACOUSTICALLY LINED.
10. INSTALLED TRANSFER GRILLE MOUNTED ON WALL BELOW 10'-8" IN BANQUET, TO PLE ABOVE CEILING IN CORRIDOR.
11. INSTALLED 52x9 DUCT TRANSITION TO 28X8 IN VERTICAL AS DUCT TURNED UP INTO SPACE.
12. INSTALLED ARCH. GRILLE MIN. 1.75 FT^2 NFA (TYP-2).
13. INSTALLED 24x24 ARCH. ACCESS DOOR FOR VOLUME DAMPER ACCESS.
14. INSTALLED 1" REFRIGERANT PIPING TO/FROM HP-1 AND CU-6, WITH $^3/_4$" CONDENSA

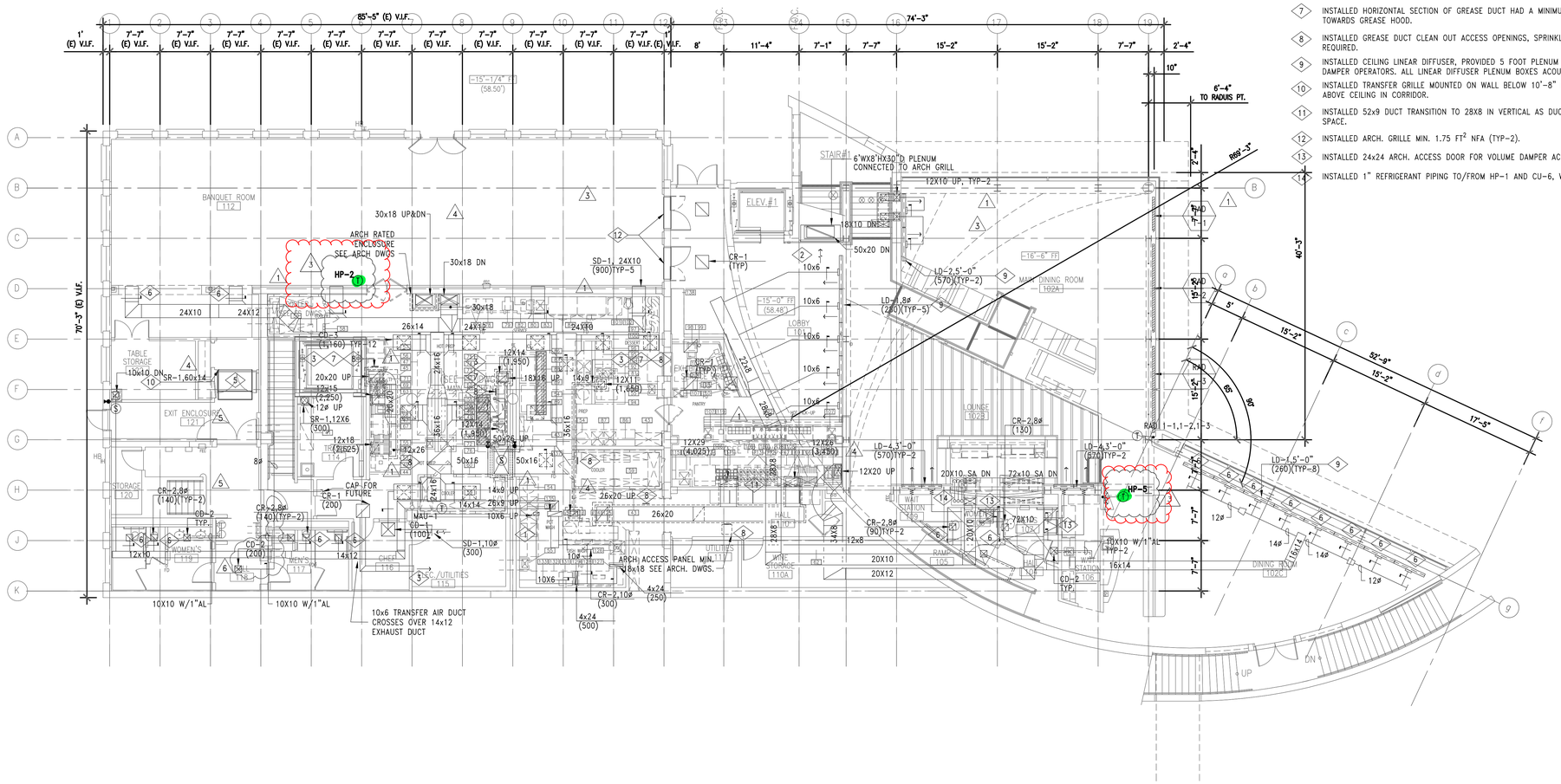

SCALE: 1/8" = 1'-0"
0 4 8 16

KEY PLAN

NO.	DESCRIPTION	BY	DATE
3	DESIGN UPDATED		08/14/19
2	INTERNAL REVIEW		07/16/19
1	INTERNAL REVIEW		05/02/19
0	DD REVIEW SET		03/15/19

PROJECT:

THE CLIFF HOUSE

1090 POINT LOBOS AVE,
SAN FRANCISCO, CALIFORNIA

DWG. TITLE:

MECHANICAL OVERALL FIRST FLOOR PLAN

BASE TRACKING: J549069	DWG. NO:
DATE: 05/02/2019	M2.1.0
SCALE: AS SHOWN	
BY: THERMA TEAM	

K:\Projects\J549069\Dwgs-SHEETS\MZT210.dwg, 9/4/19 15:45:46, mbehravan

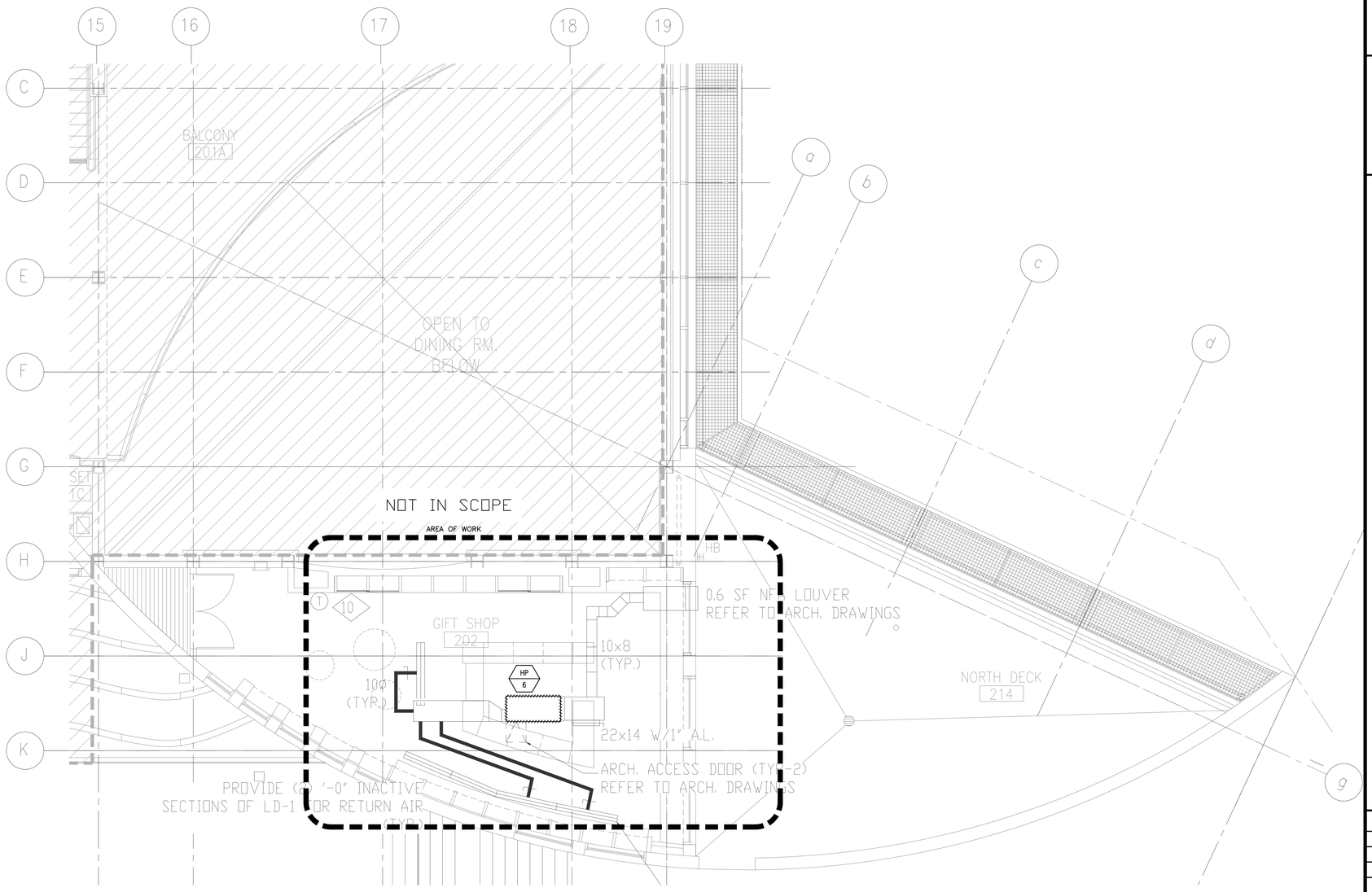

SCALE: 1/4" = 1'-0"

0 1 2 4 8

THERMA
1601 Los Plumas Ave
San Jose, CA. 95133-1613
(408) 347-3400
St Cont Lic 1027316

This drawing is and shall remain the PROPERTY OF THERMA CORPORATION whether the PROJECT for which it was made is EXECUTED or NOT. It is to be used THERMA CORPORATION PERSONNEL ONLY and is NOT to be used by anyone else for any purpose except by prior AGREEMENT IN WRITING WITH THERMA CORPORATION

REGISTERED PROFESSIONAL ENGINEER
MEHRDAD BEHRAVAN
M 054470
Exp. 6/30/19
MECHANICAL
STATE OF CALIFORNIA

KEY PLAN

NO.	DESCRIPTION	BY	DATE
3	DESIGN UPDATED		08/14/19
2	INTERNAL REVIEW		07/16/19
1	INTERNAL REVIEW		05/02/19
0	DD REVIEW SET		03/15/19

PROJECT:

THE CLIFF HOUSE

1090 POINT LOBOS AVE,
SAN FRANCISCO, CALIFORNIA

DWG. TITLE:

MECHANICAL DEMO PARTIAL
SECOND FLOOR PLAN

BASE TRACKING: J549069	DWG. NO:
DATE: 05/02/2019	MD2.2.1
SCALE: AS SHOWN	
BY: THERMA TEAM	

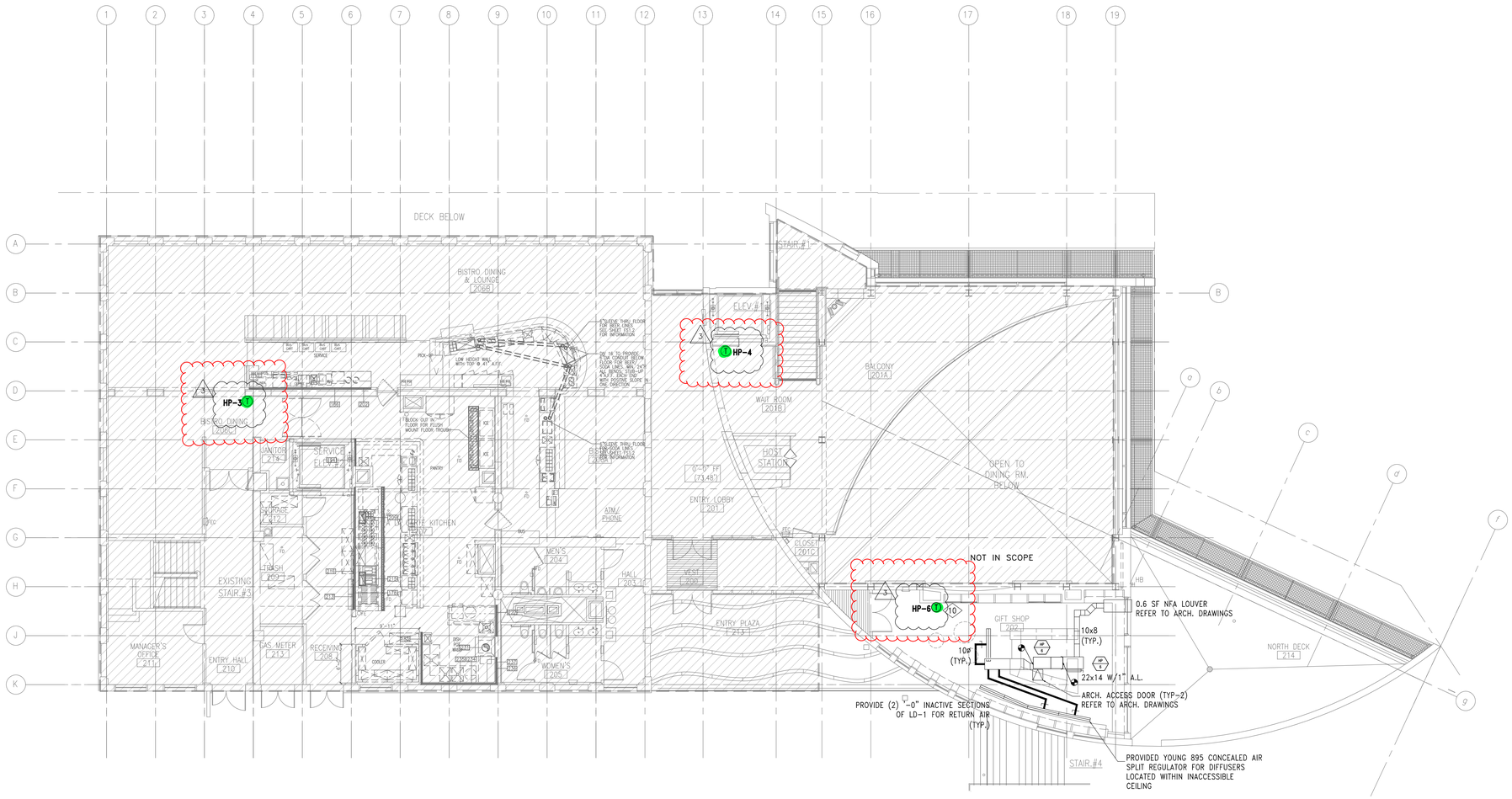

SCALE: 1/8" = 1'-0"
0 4 8 16

THERMA
1601 Las Plumas Ave
San Jose, CA. 95133-1613
(408) 347-3400
St Cont Lic 1027316

This drawing is and shall remain the PROPERTY OF THERMA CORPORATION whether the PROJECT for which it was made is EXECUTED or NOT. It is to be used THERMA CORPORATION PERSONNEL ONLY and is NOT to be used by anyone else for any purpose except by prior AGREEMENT IN WRITING WITH THERMA CORPORATION

REGISTERED PROFESSIONAL ENGINEER
MEHRDAD BEHRAVAN
M-15470
Exp. 6/30/19
MECHANICAL
STATE OF CALIFORNIA

KEY PLAN

NO.	DESCRIPTION	BY	DATE
3	DESIGN UPDATED		08/14/19
2	INTERNAL REVIEW		07/16/19
1	INTERNAL REVIEW		05/02/19
0	DD REVIEW SET		03/15/19

PROJECT:

THE CLIFF HOUSE

1090 POINT LOBOS AVE,
SAN FRANCISCO, CALIFORNIA

DWG. TITLE:

MECHANICAL OVERALL SECOND FLOOR PLAN

BASE TRACKING: J549069	
DATE: 05/02/2019	
SCALE: AS SHOWN	
BY: THERMA TEAM	

DWG. NO: M2.2.0

K:\Projects\J549069\Dwgs-SHEETS\MZT220.dwg, 9/4/19 15:50:09, mbehravan

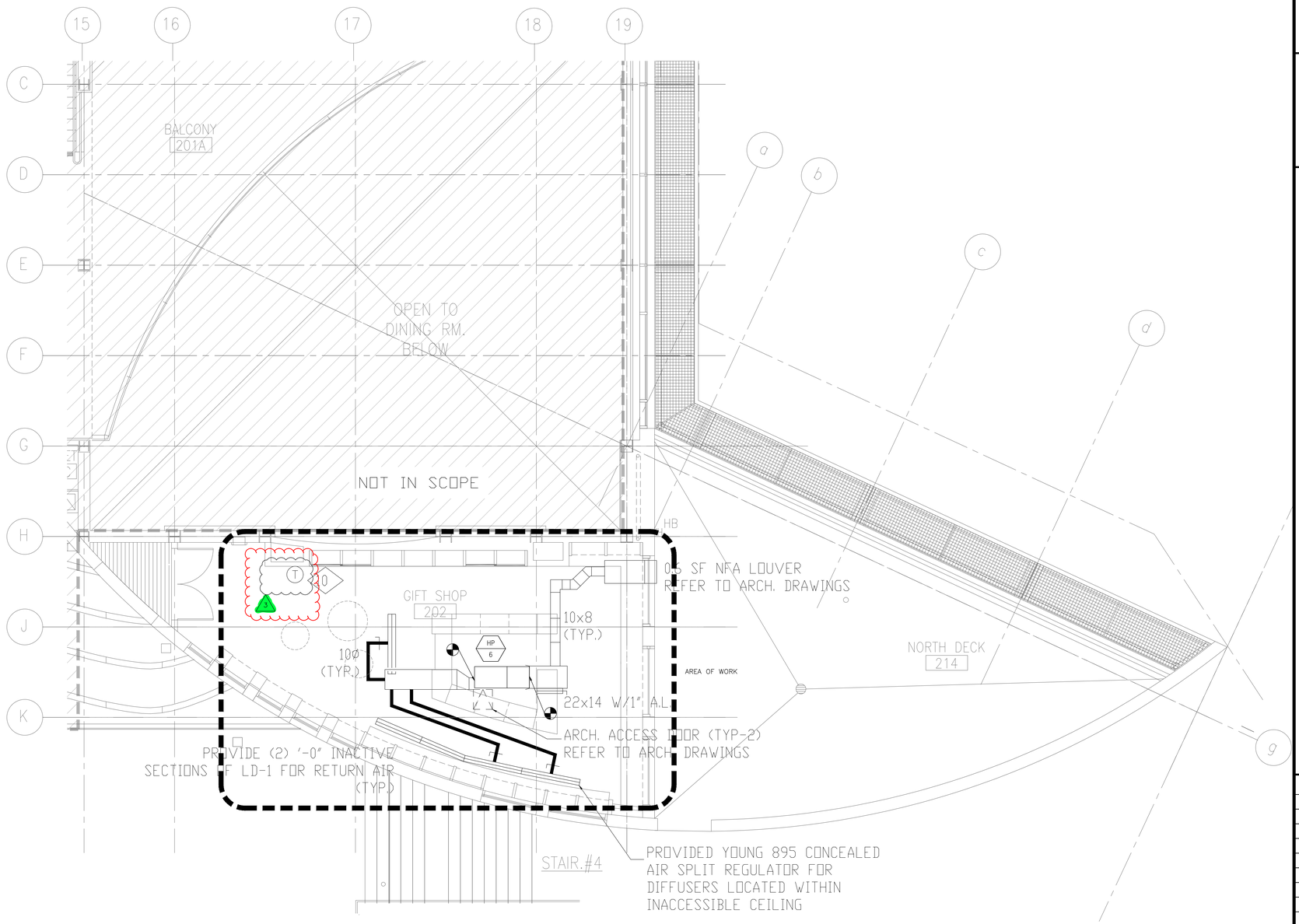

GENERAL NOTES

A. THE EXISTING REFRIGERANT PIPING TO BE FIELD MODIFIED FOR CONNECTION TO NEW SPLIT SYSTEMS IF REQUIRED

SCALE: 1/4" = 1'-0"

0 1 2 4 8

THERMA
1601 Las Plumas Ave
San Jose, CA. 95133-1613
(408) 347-3400
St Cont Lic 1027316

This drawing is and shall remain the PROPERTY OF THERMA CORPORATION whether the PROJECT for which it was made is EXECUTED or NOT. It is to be used THERMA CORPORATION PERSONNEL ONLY and is NOT to be used by anyone else for any purpose except by prior AGREEMENT IN WRITING WITH THERMA CORPORATION

REGISTERED PROFESSIONAL ENGINEER
MEHRDAD BEHRAVAN
M-15470
Exp. 6/30/19
MECHANICAL
STATE OF CALIFORNIA

KEY PLAN

NO.	DESCRIPTION	BY	DATE
3	DESIGN UPDATED		08/14/19
2	INTERNAL REVIEW		07/16/19
1	INTERNAL REVIEW		05/02/19
0	DD REVIEW SET		03/15/19

PROJECT:

THE CLIFF HOUSE

1090 POINT LOBOS AVE,
SAN FRANCISCO, CALIFORNIA

DWG. TITLE:

MECHANICAL PARTIAL SECOND FLOOR PLAN

BASE TRACKING: J549069	
DATE:	05/02/2019
SCALE:	AS SHOWN
BY:	THERMA TEAM

DWG. NO:

M2.2.1

K:\Projects\J549069\Dwgs-SHEETS\M221.dwg, 9/4/19 15:54:21, mbehravan

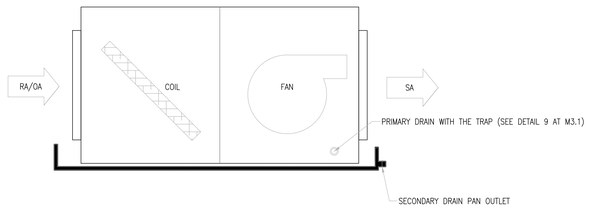

9 HP-1 & HP-6 CONDENSATE DRAIN PAN FOR THE HORIZONTAL UNITS

SCALE: NONE

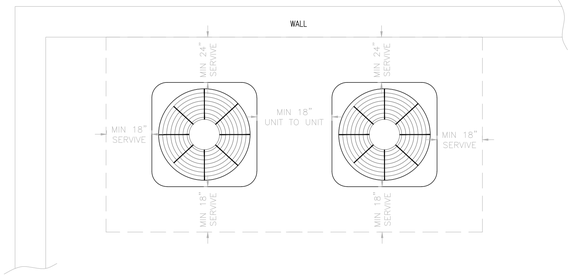

8 ALTERNATIVE INSTALLATION CLEARANCES

SCALE: NONE

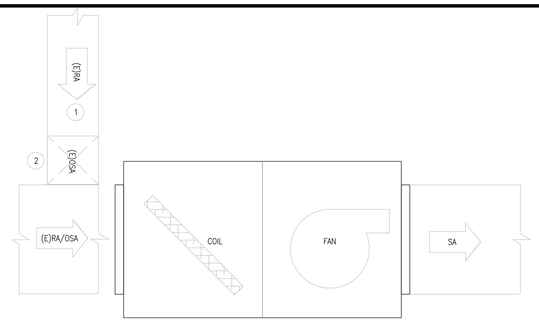

NOTES:

1. THE EXISTING RETURN AIR DUCT IS LOCATED AT THE TOP OF THE UNIT AND THE CONNECTION SHALL BE VERIFIED BY FIELD. SEE SHEET M201.
2. THE EXISTING OUTSIDE AIR DUCT (12X6) FROM 0.5 SF OUTSIDE LOUVER

8 HP-1 AIR SUPPLY/RETURN/OSA CONFIGURATION

SCALE: NONE

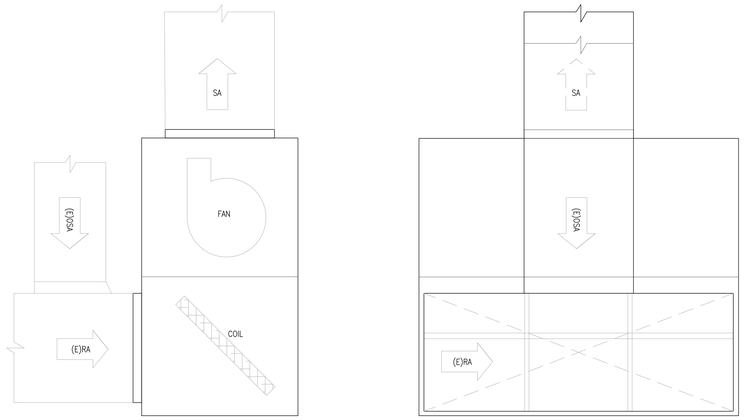

7 HP-2 & HP-3 AIR SUPPLY/RETURN/OSA CONFIGURATION

SCALE: NONE

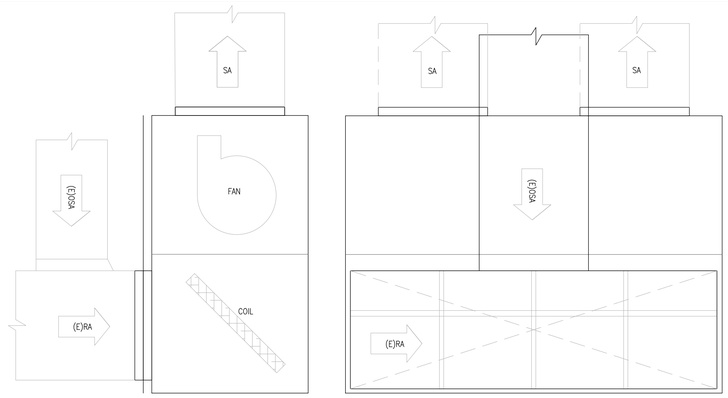

6 HP-5 AIR SUPPLY/RETURN/OSA CONFIGURATION

SCALE: NONE

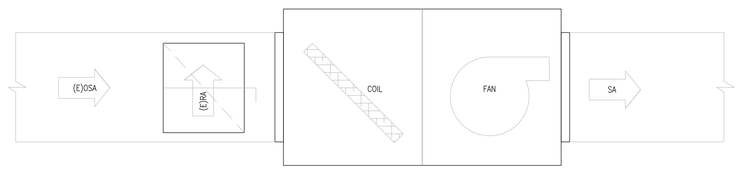

5 HP-6 AIR SUPPLY/RETURN/OSA CONFIGURATION

SCALE: NONE

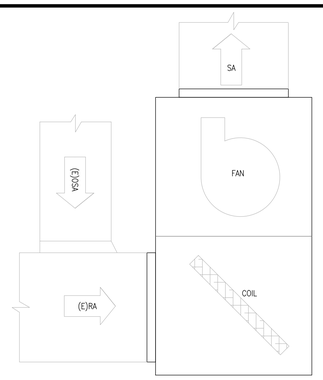

4 HP-4 AIR SUPPLY/RETURN/OSA CONFIGURATION

SCALE: NONE

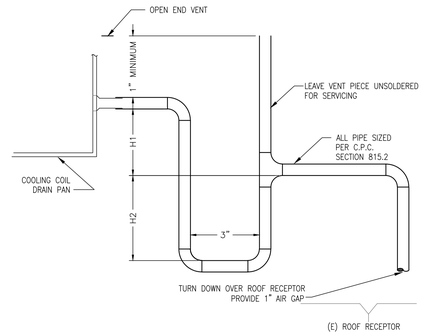

NOTES:

1. DRAIN LINE CONNECTION, FITTINGS AND UNIONS MUST BE INSTALLED TO CLEAR PANEL DOOR OPENINGS, ENABLING SERVICEABILITY OF THE UNIT.
2. SLOPE THE DRAIN LINE 1/8" PER FOOT.
3. INSTALL A PLUGGED TEE TO FACILITATE CLEANING.

CONDENSATE TRAP SCHEDULE

UNIT SERVED	TYPE	SP (in)	DIMENSIONS (IN) H1	H2	EQUIP. CAP (TONS)	PIPE SIZE(IN)	MIN. PAD HT. REQ'D(IN)	COMMENTS
HP-1	DRAW THROUGH	0.1	1.1	0.55	5	1	2.65	1
HP-2	DRAW THROUGH	1.3	2.3	1.15	15	1	4.45	1
HP-3	DRAW THROUGH	1.3	2.3	1.15	15	1	4.45	1
HP-4	DRAW THROUGH	0.1	1.1	0.55	5	1	2.65	1
HP-5	DRAW THROUGH	1.27	2.27	1.135	20	1.25	4.655	1
HP-6	DRAW THROUGH	0.1	1.1	0.55	4	1	2.65	1

*THE VALUE FOR SP IS AT THE CONDENSATE PAN

1 PIPE SIZE CANNOT BE SMALLER THAN CONNECTION SIZE

3 CONDENSATE DRAIN TRAP

SCALE: NONE

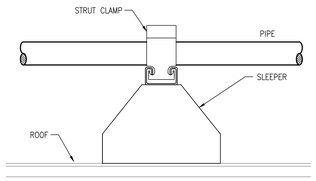

2 TYP. NON-INSULATED PIPE SUPPORT DETAIL

SCALE: NONE

RECTANGULAR DUCT HANGERS MINIMUM SIZE

MINIMUM HALF OF DUCT PERIMETER	PAIR AT 10FT SPACING STRAP	WIRE/ROD	PAIR AT 8FT SPACING STRAP	WIRE/ROD	PAIR AT 5FT SPACING STRAP	WIRE/ROD	PAIR AT 4FT SPACING STRAP	WIRE/ROD
P/2<30"	1"X22 ga	10 ga (.0.135")	1"X22 ga	10 ga (.0.135")	1"X22 ga	12 ga (.0.106")	1"X22 ga	12 ga (.0.106")
P/2=72"	1"X18 ga	3/8"	1"X20 ga	1/4"	1"X22 ga	1/4"	1"X22 ga	1/4"
P/2=96"	1"X16 ga	3/8"	1"X18 ga	3/8"	1"X20 ga	3/8"	1"X22 ga	1/4"
P/2=120"	1 1/2"X 16 ga	1/2"	1"X18 ga	3/8"	1"X18 ga	3/8"	1"X20 ga	1/4"
P/2=168"	1 1/2"X 16 ga	1/2"	1 1/2"X 16 ga	1/2"	1"X16 ga	3/8"	1"X18 ga	3/8"
P/2=192"	NOT GIVEN	1/2"	1 1/2"X 16 ga	1/2"	1"X16 ga	3/8"	1"X16 ga	3/8"
P/2=192" UP	SPECIAL ANALYSIS REQUIRED							

WHEN STRAPS ARE LAP JOINED USE THESE MINIMUM FASTENERS:	SINGLE HANGER MINIMUM ALLOWABLE LOAD STRAP	WIRE OR ROD (Dia)
1" X 18, 20,22 ga- two #10 or one 1/4" bolt	1"X22 ga - 260 lbs	0.106"-50 lbs 0.135"-120 lbs
1" X 16ga- two 1/4" dia	1"X20 ga - 320 lbs	0.162"-160 lbs 1/4"-270 lbs
1 1/2" X 16ga- two 3/8" dia	1"X18 ga - 420 lbs	3/8"-480 lbs
PLACE FASTENERS IN SERIES, NOT SIDE BY SIDE	1"X16 ga - 700 lbs 1 1/2"X16 ga - 1100 lbs	1/2"-1250 lbs 5/8"- 2000 lbs 3/4"-3000 lbs

NOTES:

A. DIMENSIONS OTHER THAN GAGE ARE IN INCHES

B. TABLES ALLOW FOR DUCT WEIGHT, 1 LB./SF INSULATION WEIGHT AND NORMAL REINFORCEMENT AND TRAPEZE WEIGHT BUT NO EXTERNAL LOADS

C. STRAPS ARE GALVANIZED STEEL; OTHER MATERIALS ARE UNCOATED STEEL

D. ALLOWABLE LOADS FOR P/2 ASSUME THAT DUCTS ARE 16 ga MAXIMUM, EXCEPT THAT WHEN MAXIMUM DUCT DIMENSION (W) IS OVER 60 IN. THEN P/2 MAXIMUM IS 1.25W

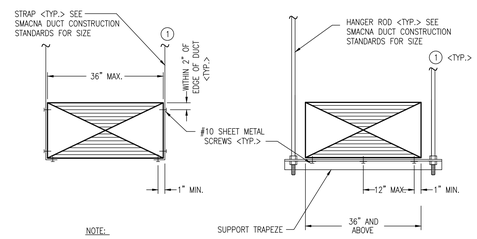

NOTE:

1. SEE SMACNA DUCT CONSTRUCTION STANDARD – 1st Ed. FOR UPPER ATTACHMENT DEVICES.

SEISMIC:

A. NO SEISMIC BRACING REQUIRED FOR THE FOLLOWING: RECTANGULAR DUCT: LESS THAN 6 SQ. FT., OVAL DUCT: LESS THAN 6 SQ. FT., ROUND DUCT: LESS THAN 28"ø

B. NO SEISMIC BRACING REQUIRED IF DUCT IS 12" OR LESS FROM TOP OF DUCT TO UPPER STRUCTURE ATTACHMENT.

C. SEE SMACNA SEISMIC RESTRAINT 1991 EDITION FOR LONGITUDINAL & TRANSVERSE BRACING, OR ENGINEERED SEISMIC DRAWING.

D. SEE SMACNA SEISMIC RESTRAINT 1991 EDITION FOR SHL GUIDELINES, CHAPTER 2, PG. 2.1, OR ENGINEERED SEISMIC DRAWING.

1 RECTANGULAR DUCT HANGING & SEISMIC NOTES

SCALE: NONE

THERMA
1601 Las Plumas Ave
San Jose, CA. 95133-1613
(408) 347-3400
St Cont Lic 1027316

This drawing is and shall remain the PROPERTY OF THERMA CORPORATION whether the PROJECT for which it was made is EXECUTED or NOT. It is to be used THERMA CORPORATION PERSONNEL ONLY and is NOT to be used by anyone else for any purpose except by prior AGREEMENT IN WRITING WITH THERMA CORPORATION

REGISTERED PROFESSIONAL ENGINEER
MEHRDAD BEHRAVAN
M-15470
Exp. 6/30/19
MECHANICAL
STATE OF CALIFORNIA

KEY PLAN

NO.	DESCRIPTION	BY	DATE
3	DESIGN UPDATED		08/14/19
2	INTERNAL REVIEW		07/16/19
1	INTERNAL REVIEW		05/02/19
0	DD REVIEW SET		03/15/19

PROJECT:

THE CLIFF HOUSE

1090 POINT LOBOS AVE,
SAN FRANCISCO, CALIFORNIA

DWG. TITLE:

MECHANICAL DETAILS

BASE TRACKING: J549069	DWG. NO:
DATE: 05/02/2019	M3.1
SCALE: AS SHOWN	
BY: THERMA TEAM	

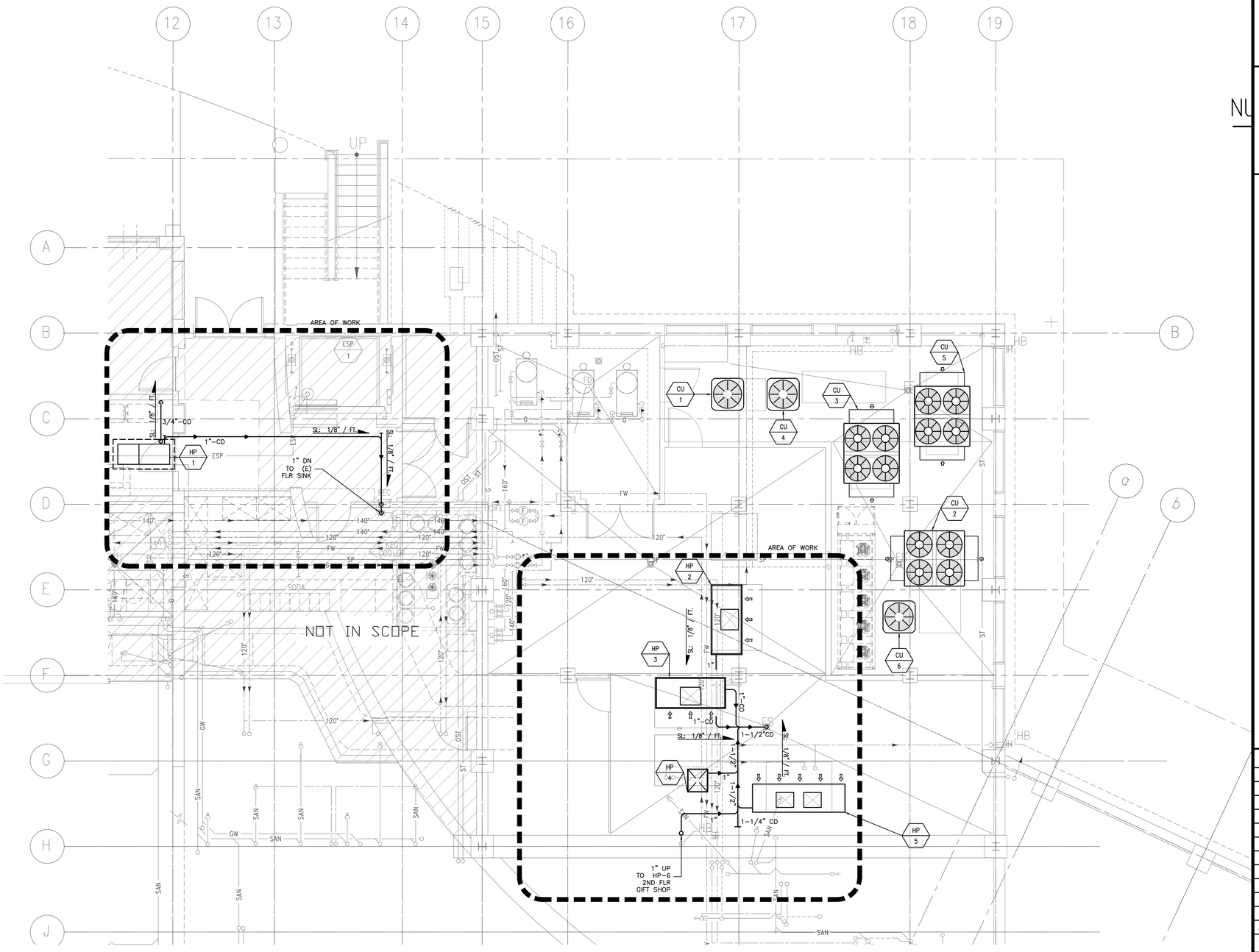

GENERAL NOTES

A. THE EXISTING CONDENSATE PIPING MAY BE MODIFIED FOR NEW HP UNITS

SCALE: 1/4" = 1'-0"

0 1 2 4 8

THERMA
1601 Los Plumas Ave
San Jose, CA. 95133-1613
(408) 347-3400
St Cont Lic 1027316

This drawing is and shall remain the PROPERTY OF THERMA CORPORATION whether the PROJECT for which it was made is EXECUTED or NOT. It is to be used THERMA CORPORATION PERSONNEL ONLY and is NOT to be used by anyone else for any purpose except by prior AGREEMENT IN WRITING WITH THERMA CORPORATION

REGISTERED PROFESSIONAL ENGINEER
M. BEHRAVAN
No. M 054470
Exp. 6/30/19
MECHANICAL
STATE OF CALIFORNIA

NU

KEY PLAN

NO.	DESCRIPTION	BY	DATE
3	DESIGN UPDATED		08/14/19
2	INTERNAL REVIEW		07/16/19
1	INTERNAL REVIEW		05/02/19
0	DD REVIEW SET		03/15/19

PROJECT:

THE CLIFF HOUSE

1090 POINT LOBOS AVE,
SAN FRANCISCO, CALIFORNIA

DWG. TITLE:

PLUMBING PARTIAL GROUND FLOOR PLAN

BASE TRACKING: J549069	
DATE: 05/02/2019	
SCALE: AS SHOWN	
BY: THERMA TEAM	

DWG. NO:

P2.0.1

K:\Projects\J549069\Dwgs-SHEETS\P201.dwg, 9/4/19 16:07:32, mbehravan

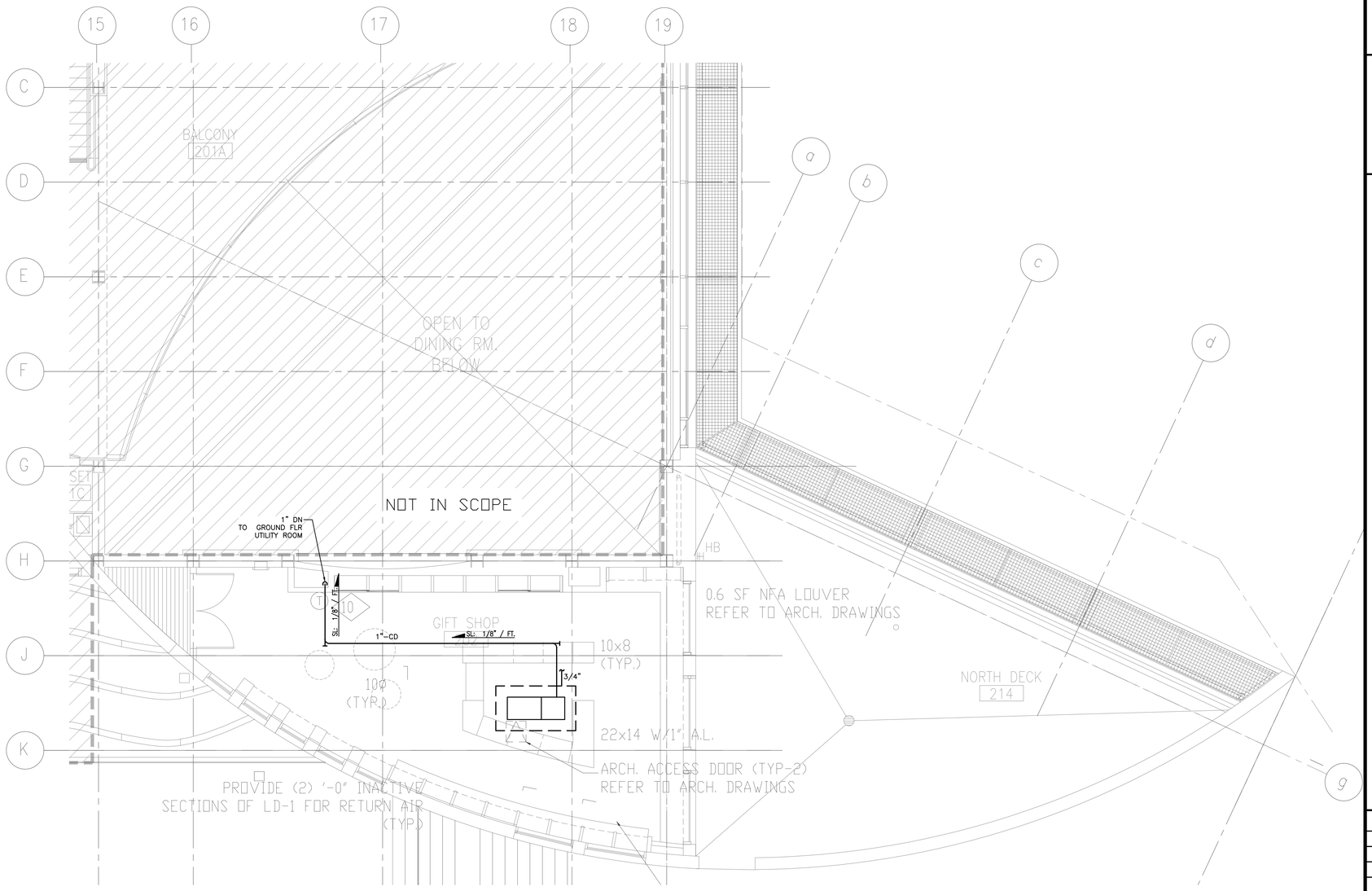

GENERAL NOTES

A. THE EXISTING CONDENSATE PIPING MAY BE MODIFIED FOR NEW HP UNIT

SCALE: 1/4" = 1'-0"

0 1 2 4 8

THERMA
1601 Las Plumas Ave
San Jose, CA. 95133-1613
(408) 347-3400
St Cont Lic 1027316

This drawing is and shall remain the PROPERTY OF THERMA CORPORATION whether the PROJECT for which it was made is EXECUTED or NOT. It is to be used THERMA CORPORATION PERSONNEL ONLY and is NOT to be used by anyone else for any purpose except by prior AGREEMENT IN WRITING WITH THERMA CORPORATION

REGISTERED PROFESSIONAL ENGINEER
M. BEHRAVAN
No. M 054470
Exp. 6/30/19
MECHANICAL
STATE OF CALIFORNIA

KEY PLAN

NO.	DESCRIPTION	BY	DATE
3	DESIGN UPDATED		08/14/19
2	INTERNAL REVIEW		07/16/19
1	INTERNAL REVIEW		05/02/19
0	DD REVIEW SET		03/15/19

PROJECT:

THE CLIFF HOUSE

1090 POINT LOBOS AVE,
SAN FRANCISCO, CALIFORNIA

DWG. TITLE:

PLUMBING PARTIAL
SECOND FLOOR PLAN

BASE TRACKING: J549069	
DATE: 05/02/2019	
SCALE: AS SHOWN	
BY: THERMA TEAM	

DWG. NO:

P2.2.1